SERVICE MANUAL 6326

Description, Installation and Maintenance

FLASHING LIGHT ASSEMBLY

XA-120 Junction Box Crossarm

HC-100 Signal Light Unit

HC-120A Signal Light Unit

January, 1985
ID0099D-DN0433A

UNION SWITCH & SIGNAL DIVISION
AMERICAN STANDARD INC. / SWISSVALE, PA 15218

REVISION INDEX

Revised pages of this manual are listed below by page number and date of revision.

Page No.	Date of Revision

CONTENTS

SECTION		
I	GENERAL INFORMATION	1-1
1.1	INTRODUCTION	1-1
1.2	EQUIPMENT DESCRIPTION	1-1
1.2.1	Flashing Light Assembly	1-1
1.2.2	HC-120A Flashing Light Unit	1-1
1.2.3	HC-120 Flashing Light Unit	1-2
1.2.4	XA-120 Junction Box Crossarm	1-2
1.3	APPLICATION	1-2
1.4	BEAM SPREAD AND DEFLECTION	1-2
II	INSTALLATION	2-1
2.1	GENERAL	2-1
2.2	INSTALLATION OF JUNCTION BOX CROSSARM	2-1
2.3	INSTALLATION OF LIGHT UNITS	2-1
III	ALIGNMENT/ADJUSTMENTS	3-1
3.1	GENERAL	3-1
3.2	LIGHT UNITS ALIGNMENT	3-1
IV	MAINTENANCE	4-1
4.1	GENERAL	4-1
4.2	FIELD MAINTENANCE	4-1
4.2.1	Cleaning	4-1
4.2.2	Inspection	4-1
4.3	SHOP MAINTENANCE	4-2
4.3.1	Junction Box Crossarms	4-2
4.3.2	Signal Light Units	4-3
4.3.3	Shop Alignment/Adjustment Procedures - HC-100 Light Unit	4-3
4.3.4	Shop Adjustment/Alignment Procedures - HC-120A Light Unit	4-7
V	APPLICATION DRAWINGS	5-1

APPENDIX A - PARTS LIST

ILLUSTRATIONS

Figure		Page No.
1-1	Flashing Light Assembly	iii/iv
1-2	Flashing Light Assembly Configurations	1-3
1-3	Beam Spread and Deflection	1-4
2-1	Signal Lamp Wiring Diagram	2-3/2-4
3-1	Azimuth Adjustment	3-2
3-2	Range Adjustment	3-2
3-3	Light Unit(s) Alignment	3-4
4-1	Signal Positions on Test Stand	4-4
4-2	Location of Screen Targets	4-4
4-3	Alignment and Soldering of Lamp Receptacle Bracket	4-7
4-4	Soldering of Lamp Socket	4-7
4-5	Target Description	4-8
4-6	HC-120A Lamp Adjustment	4-9
5-1	XA-120 With 4" Aluminum Mast	5-3/5-4
5-2	XA-120 With 10" O.D. Single or Double Mast Cantilever	5-5/5-6
5-3	XA-120 With 5" Pipe Mast	5-7/5-8
5-4	XA-120 With 5" Mast and Wood Gate Arm	5-9/5-10
5-5	XA-120 For Cantilever (Model Z)	5-11/5-12
5-6	XA-120 With 4" Aluminum Mast	5-13/5-14
5-7	HC-100, HC-120A on 4" and 11" O.D. Aluminum Cantilever Mast	5-15/5-16
5-8	HC-100, HC-120A on 5" Mast and Wood Gate Arm	5-17/5-18
5-9	Cantilever Assembly Tabulation	5-19/5-20
5-10	XA-120 with 2 or 4 Light HC-120A Assembly	5-21/5-22
5-11	XA-120 with 2 or 4 Light HC-100 Assembly	5-23/5-24

THIS PAGE INTENTIONALLY LEFT BLANK

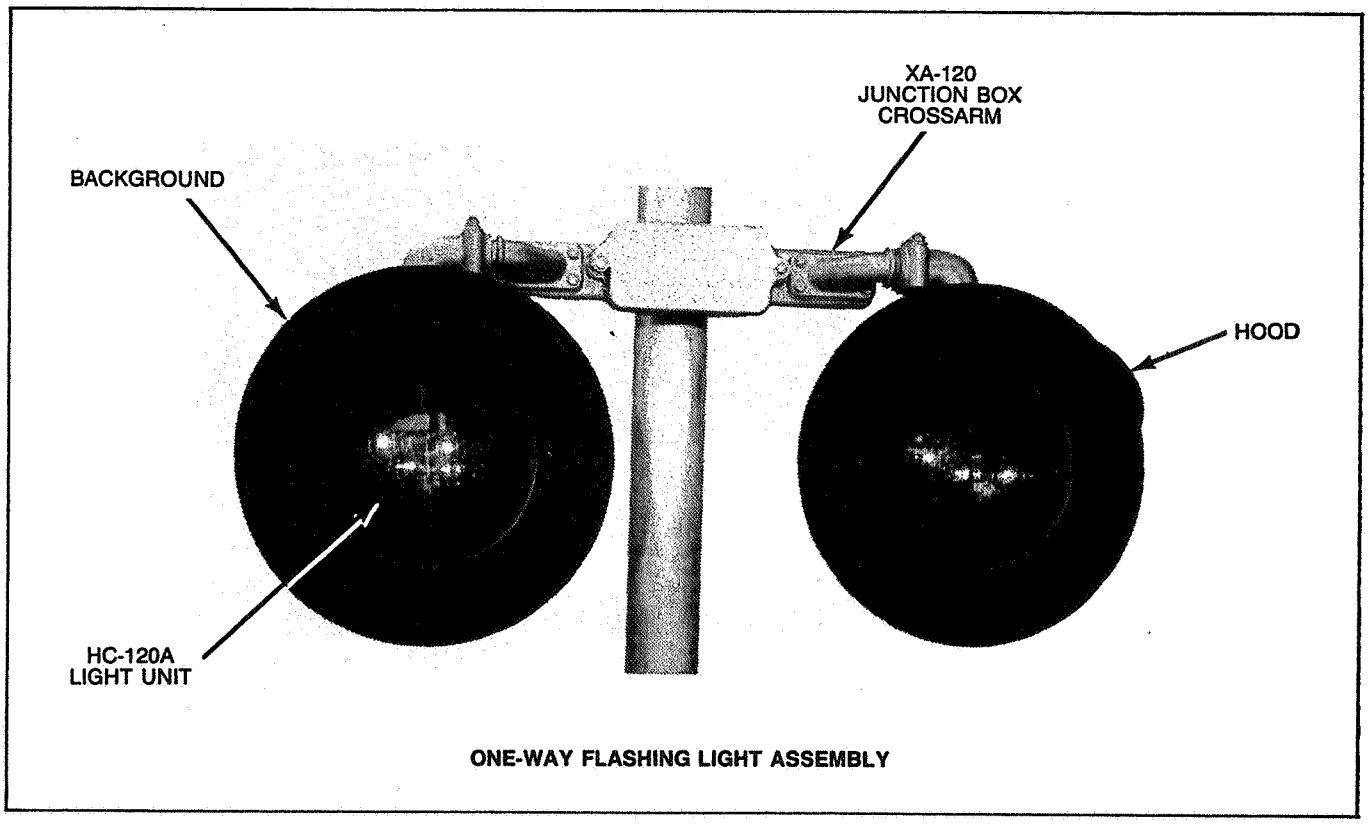

ONE-WAY FLASHING LIGHT ASSEMBLY

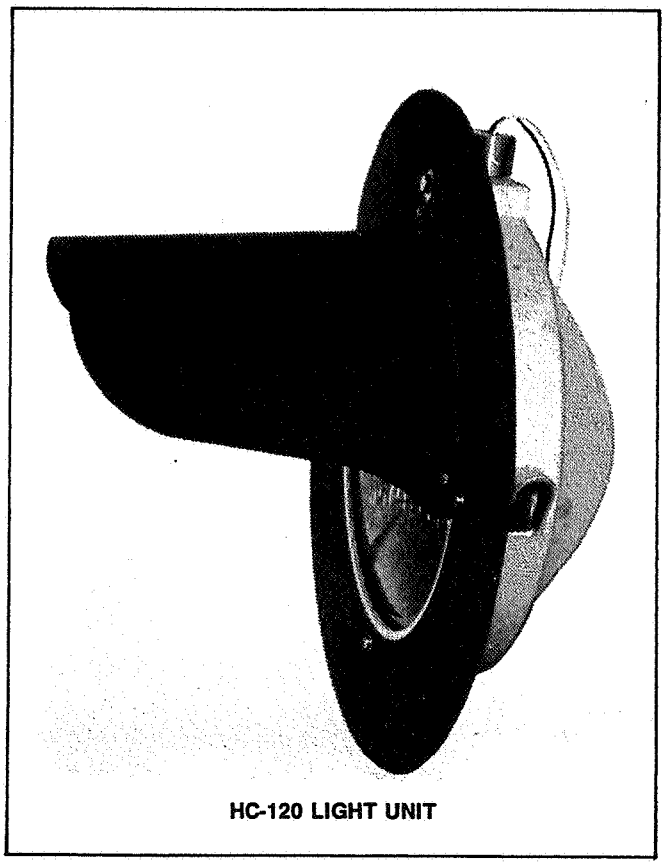

HC-120 LIGHT UNIT

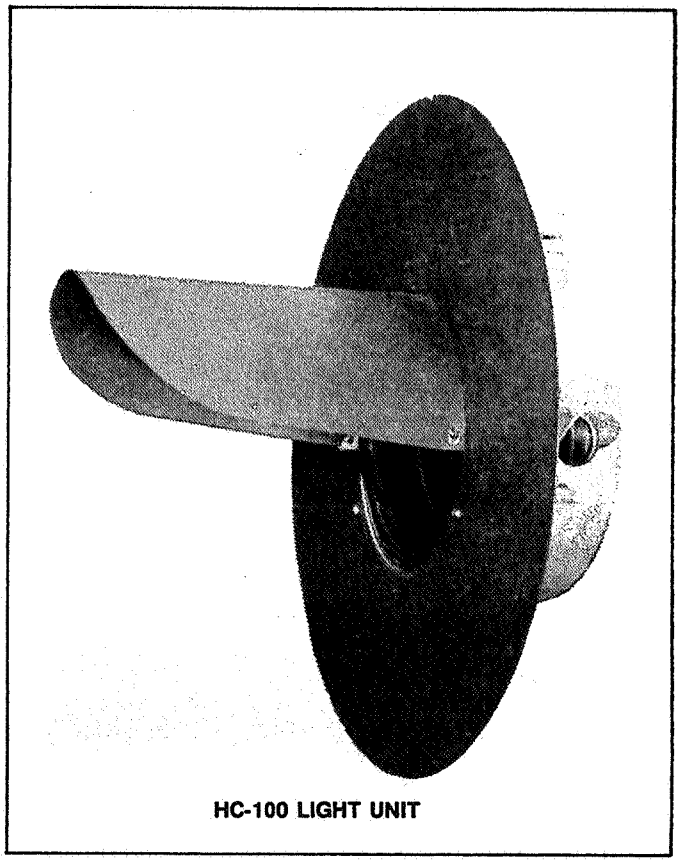

HC-100 LIGHT UNIT

Figure 1-1. Flashing Light Assembly

SECTION I
GENERAL INFORMATION

1.1 INTRODUCTION

This manual covers description, installation and maintenance of the components that make-up the Flashing Light Assembly for grade crossing warning systems as described in Service Manual 5958.

1.2 EQUIPMENT DESCRIPTION

1.2.1 Flashing Light Assembly (Figure 1-1)

The XA-120 crossarms are manufactured from aluminum for light weight, long service life and minimal maintenance. The aluminum HC-100 and HC-120A light units include tough, shatter-resistance Lexan roundels that are available with different light beam patterns as explained under "Beam Spread and Deflection" in pargraph 1-4. In addition to the standard 20" background, the HC-120A light units are also available with the larger 24" background.

The light assemblies are availabe in 1-way and 2-way configurations for flashing light only, cantilever applications, and for flashing light/gate combinations that include aluminum, fiberglass or wooden gate arms.

Five different lamps can be ordered for use with these light assemblies. Descriptions, part numbers and characteristics of these lamps are listed in the Parts List, Appendix A.

1.2.2 HC-120A Flashing Light Unit (Figure 1-1)

The HC-120A Light Unit is constructed of aluminum with stainless steel hardware, and utilizes a 12" deep dish parabolic reflector with a 12" red Lexan roundel. The reflector is center mounted for easy replacement. The roundels come in different beam spread and deflection combinations. Therefore, when replacing a roundel in the field, it is important that it is replaced with one of the same kind. The cover, which is secured by a bolt that accepts the AAR terminal wrench, swings open to provide easy access to the interior for changing the lamp, interior cleaning, or other maintenance.

The lamp socket is brass plated and its mounting allows for X, Y, Z axis lamp location adjustment. The socket accepts 10 or 25-watt, 10-volt S-11 lamps; 25-watt 110-volt G-16-1/2 lamps; or 10-volt 16 or 36-watt Quartz-iodide lamps. Voltage reading can be taken at the bulb for battery adjustments.

The light unit has a standard 1-1/4" straight pipe thread suitable for mounting the unit to all type crossarms.

1.2.3 HC-100 Flashing Light Unit (Figure 1-1)

The HC-100 Light Unit is constructed of aluminum for long service life and easy maintenance. It is equipped with a standard reflector and 8-3/8" roundel. The roundels are available in red Lexan or red plexiglass, and yellow glass for special applications. Roundels come in different beam and spread combinations. Therefore, when replacing a roundel in the field, it is important that it is replaced with one of the same kind. The cover swings open for easy access to the interior for lamp replacement and other maintenance. The lamp holder is also 3-axis (X, Y and Z) adjustable and uses the same lamps as the HC-120A Light Unit described in paragraph 1.2.1.1.

1.2.4 XA-120 Junction Box Crossarm (Figure 1-1)

Junction Box Crossarms are available in different configurations to provide a wide range of applications. The crossarms are constructed of aluminum for long service life, minimum maintenance, and ease of installation. The junction box, used for interconnecting the wiring, contains standard AAR terminals complete with terminal nuts and washers. Removable end plates are provided on the arms for easier access to the wires for stringing. Threaded elbows allow for independent horizontal (azmiuth) and vertical (range) adjustments of each signal. Attaching hardware consists of a U-bolt clamp and nuts. The nuts are located in the junction box.

1.3 APPLICATION

The Flashing Light Assembly is offered in various arrangements listed below. These are shown pictorically in Figure 1-2.

- 2-Light Units on 1 Crossarm
- 4-Light Units (back-to-back) on 1 Crossarm
- Cantilever Mast 10-12" Diameter
- Standard 4" or 5" Mast with a wooden gate arm
- Standard 4" or 5" Mast with aluminum/fiberglass combination gate arm

1.4 BEAM SPREAD AND DEFLECTION

Horizontal spread and downward deflection of the signal beam is measured as illustrated in Figure 1-3. Note that the reference for both measurements is the signal sighting plane which can vary with the position of the signal unit on the crossarm.

The standard beam pattern for mast-mounted light assemblies in conventional applications is 30° of horizontal spread and 15° of downward deflection. A 20° horizontal spread and a 32° downward deflection pattern is required for light assemblies mounted on cantilever arms. A beam pattern of 70° horizontal spread and 0° downward deflection is necessary where light dispersion over a wide horizontal angle may be desired as, for example, in the case of the back lights in a 2-way light assembly configuration.

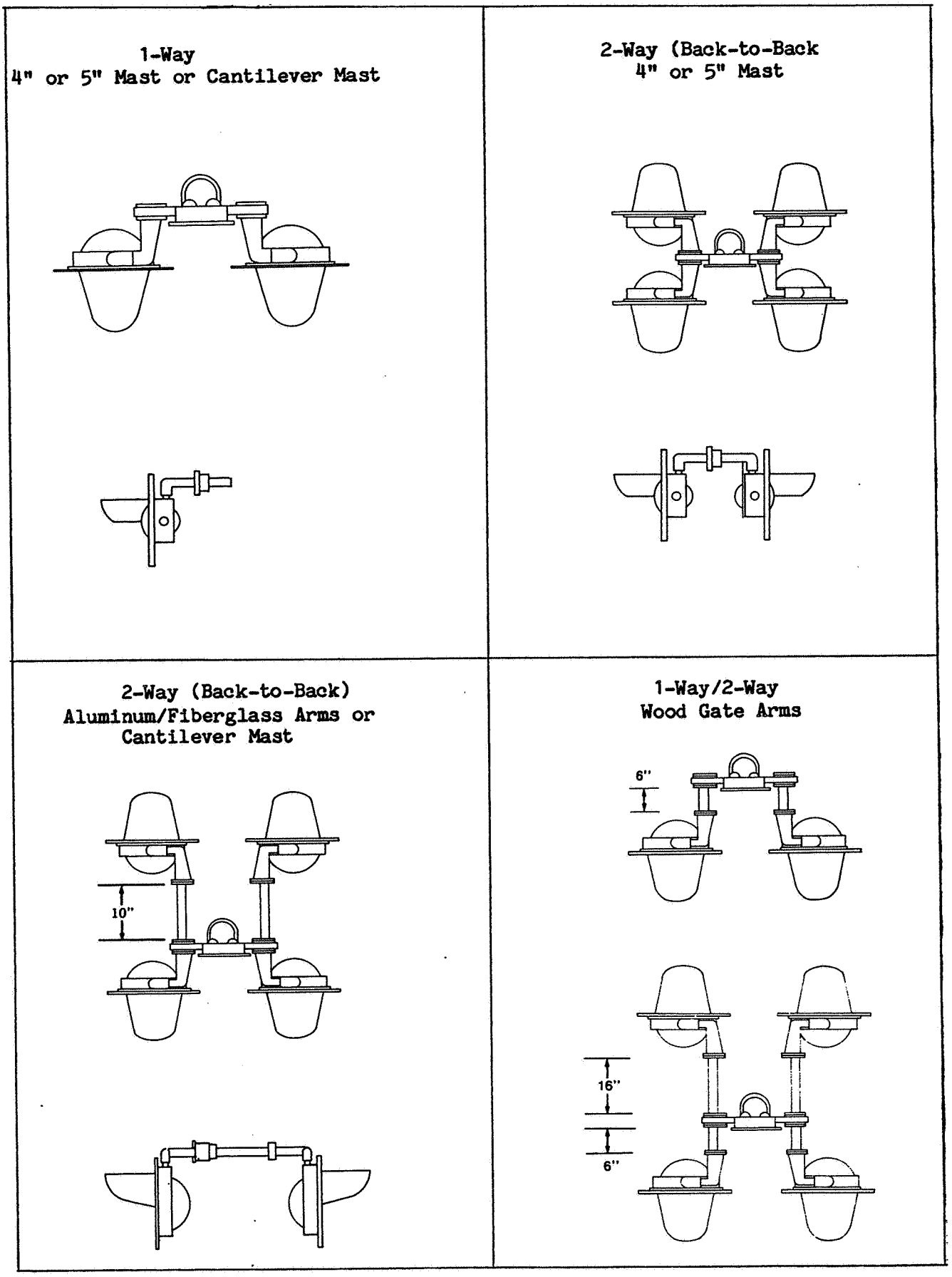

Figure 1-2. Flashing Light Assembly Configurations

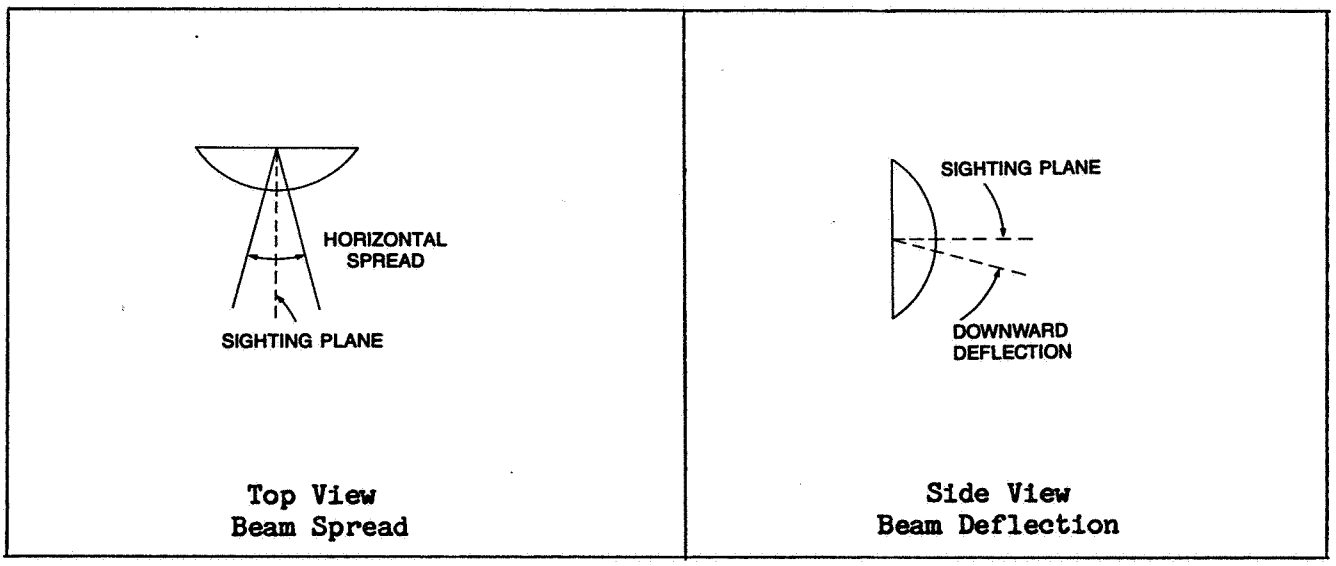

Figure 1-3. Beam Spread and Deflection

SECTION II
INSTALLATION

2.1 GENERAL

NOTE

Both the HC-100 and HC-120A Light Units are installed in the same manner. The light units may be fastened to the junction box crossarms and pre-wired when received. If not, they may be mounted to the junction box crossarm before installing the junction box crossarm, or installed after the junction box crossarm is mounted (refer to paragraph 2.3).

2.2 INSTALLATION OF JUNCTION BOX CROSSARM

a. Open the junction box cover on the crossarm by loosening the two bolts and swinging the cover open.

b. Remove the U-bolts and temporarily place them aside.

c. Lift the crossarm into position and feed the cable protruding from the mast into the junction box outlet. Position the crossarm on the mast with the back of the junction box aligning with the pre-drilled hole in the mast.

d. Install U-bolt nuts, and tighten securely. Torque U-bolts to 70-90 ft. lbs.

e. Connect the cable to the terminals as shown in Figure 2-1.

f. Close and secure the junction box cover.

2.3 INSTALLTAION OF LIGHT UNITS

Installation Procedure

a. Open the junction box cover on the crossarm by loosening the two bolts and swinging the cover open.

b. Remove the elbow from the cross arm bracket and fasten to the light unit.

c. Carefully feed the pigtail from the light unit through the bracket and through the arm to the junction box. End plates on the arms may be removed to facilitate stringing the wires. A fish tape may also be helpful.

NOTE

If extension arms need to be attached, signal light brackets must be removed from the crossarm. Remove the four screw nuts and washers that secure the signal light brackets to the crossarm. Brackets can now be removed. Align the four holes in the extension arm cover plate with the holes in the crossarm, making sure that the gasket is between these two pieces. Install the four screws.

Slide gasket and signal light bracket or an extension arm (whichever is required) onto the screws. Install the four washers and nuts.

Remaining brackets must now be installed. Align the four holes in the cover plate of signal light bracket with the holes in extension arm cover plate. Make sure gasket is between these two pieces and install screws, washers, and nuts.

At this point, it is best to have arranged a fish wire or fish string through the crossarm and any extensions there might be so that the signal unit with elbow attached can be assembled to the remaining part of the crossarm unit as the fish wire is tied to the lamp pigtail and pulled through to the junction box.

d. Secure the light unit to the bracket. Loosen the set screws on the elbow and position light unit to its approximate final position. Repeat for all other light units.

e. Complete wiring by attaching leads to terminals in accordance with Figure 2-1.

f. Secure junction box cover.

g. If crossarm end plates were removed, replace and secure with attaching hardware.

h. Align the signal light units in accordance with Section III.

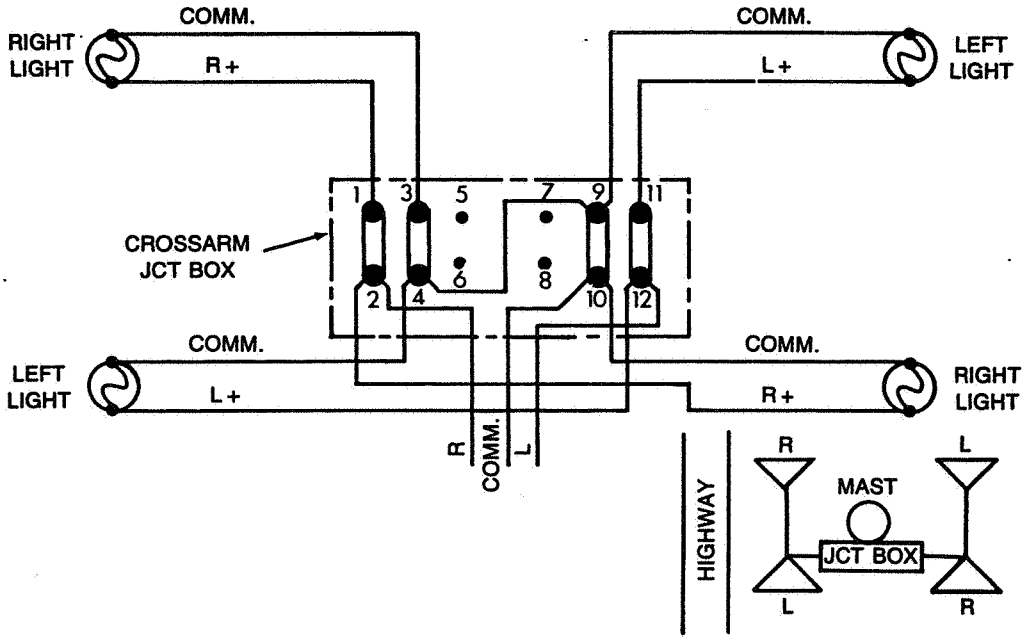

4 UNIT SIGNAL

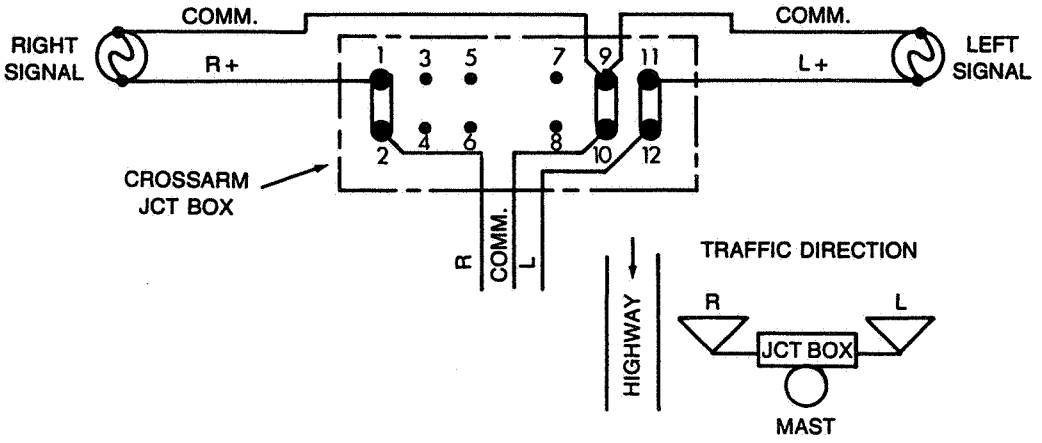

2 UNIT SIGNAL

Figure 2-1. Signal Lamp Wiring Diagrams

SECTION III
ALIGNMENT/ADJUSTMENTS

3.1 GENERAL

Field alignment and adjustments consists of the azimuth and range. Both the azimuth adjustment and range adjustment can be made independently from each other.

3.2 LIGHT UNITS ALIGNMENT (See Figures 3-1 and 3-2)

Vertical adjustment should be made first with the horizontal adjustment tightly clamped so that unit wiggling does not cause a bad vertical adjustment. A sighting tube (N170622) can be used to aid in the initial adjustment. The final adjustment should be checked by an observer on the road.

AAR Signal Manual Part 268, 1972 Revision is repeated herein as a Guide to Signal Unit Alignment. Some sentences of manual Part 228 are omitted for simplicity sake.

ALIGNING HIGHWAY CROSSING SIGNAL REFLECTOR TYPE LIGHT UNITS (REVISED SIGNAL MANUAL PART 268)

a. The aligning of electric light units in accordance with these instructions must not be started until proper protection has been afforded for highway and pedestrian traffic. When aligning, care must be exercised that no unsafe conditions are set up.

   (1) The lamp receptacles are positioned and sealed by the manufacturer, using 1/64 inch precision based lamps. To obtain the range and efficiency intended, signal precision lamps must always be used in the light units.

   (2) When aligning of light units has been completed, tests must be made immediately to determine that the equipment functions as intended.

b. Procedure is as follows:

   (1) Front Light Units

      (a) Continuously light one lamp.
      (b) Open door wide so clear beam is displayed.
      (c) Adjust light unit vertically to align axis of beam five feet six inches above pavement at selected alignment distance. Both lamps should be aligned to same point.

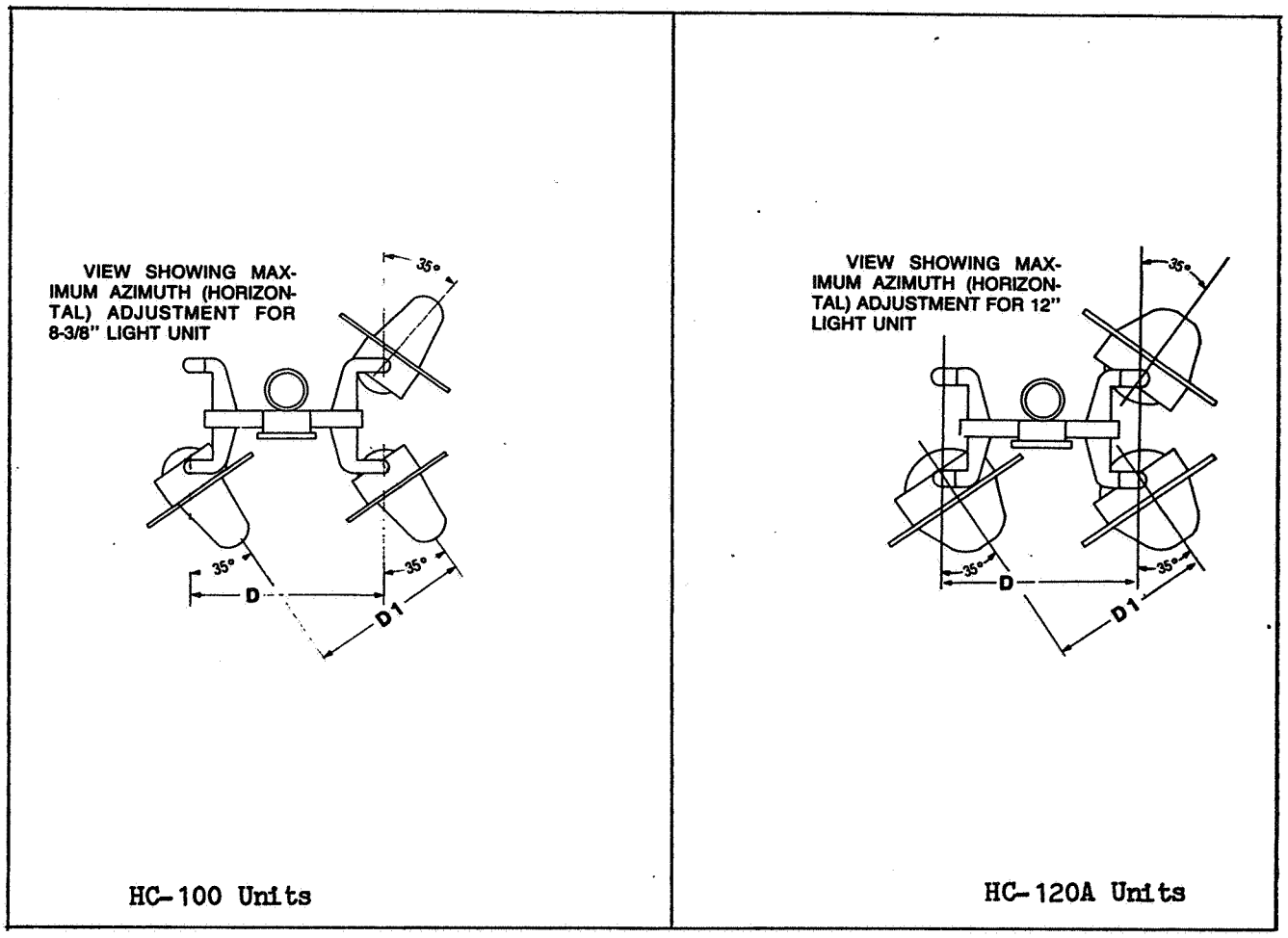

Figure 3-1. Azimuth Adjustment

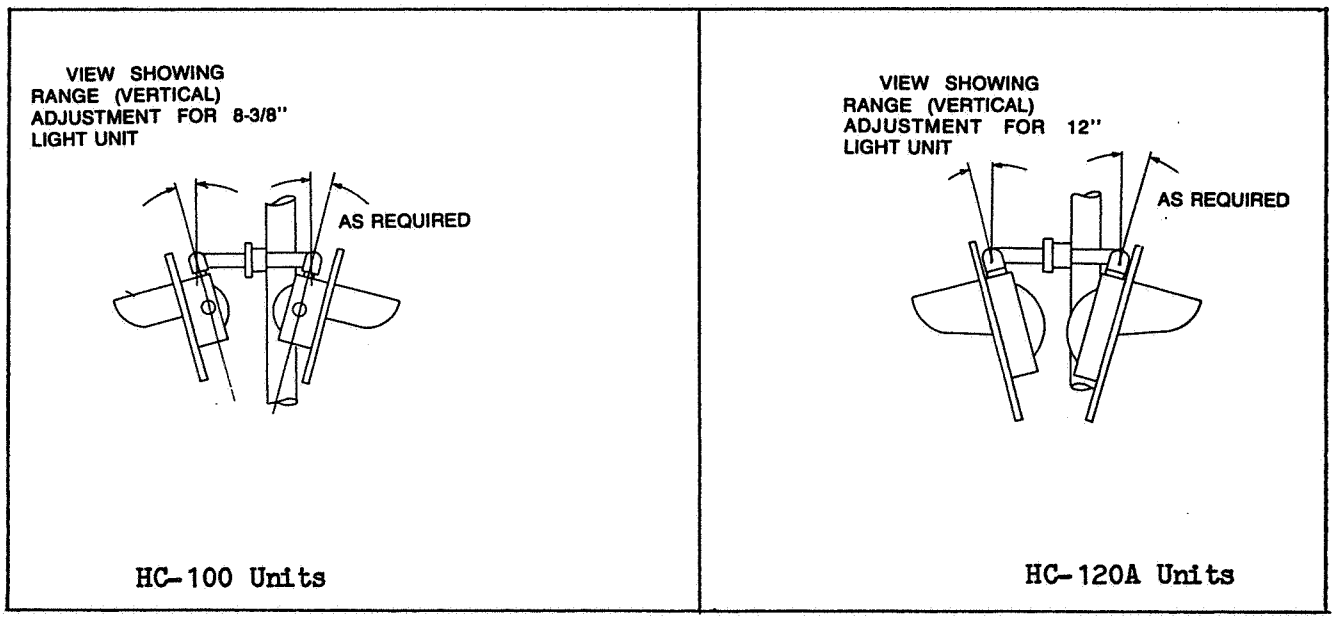

Figure 3-2. Range Adjustment

(d) Adjust light unit horizontally to align axis of beam to center of approach lane in approach to signal at selected alignment distance, maintaining vertical alignment.
(e) Tighten clamps and close door.
(f) Repeat instructions for other front light units.

(2) Back Light Units Where Used

(a) Continuously light one lamp.
(b) Open door wide so clear beam is displayed.
(c) Adjust light unit vertically to align axis of beam five feet six inches above pavement at a point 50 ft. in approach to the signal on opposite side of track.
(d) Adjust light unit horizontally to align axis of beam to a point 50 feet with symmetric patterned roundels, 150 feet with non-symmetrical roundels in approach to the signal on opposite side of track and in center of approach lane, maintaining vertical alignment as in Instruction (2)(c).
(e) Tighten clamps and close door.
(f) Repeat Instructions for other back light units.

(3) After units have been aligned, clamps tightened and doors closed, they must be checked with lights flashing and lamps burning at recommended voltage to make certain a flashing light aspect is visible within a range of 1,000 feet.

NOTE

Torque on 3/8" U-bolts nuts of the crossarm elbows should be 15-20 ft./lbs. Torque on 3/8" bolt which hold junction box door should be 8-13 ft./lbs.

c. Assemble background and hood on each signal unit. Torque #10-32 screws which hold background and hood in place to 1-2 foot/lbs.

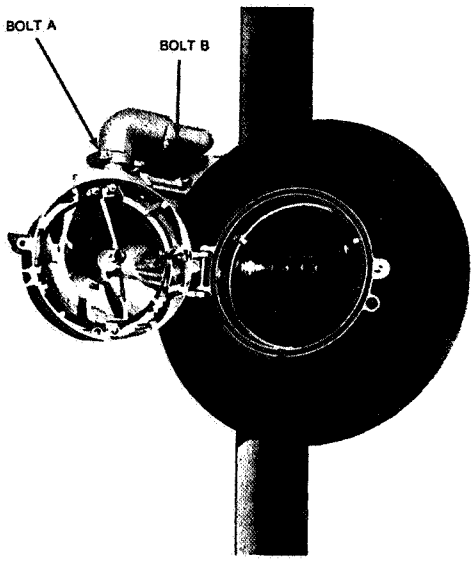

HC-100 Light Unit

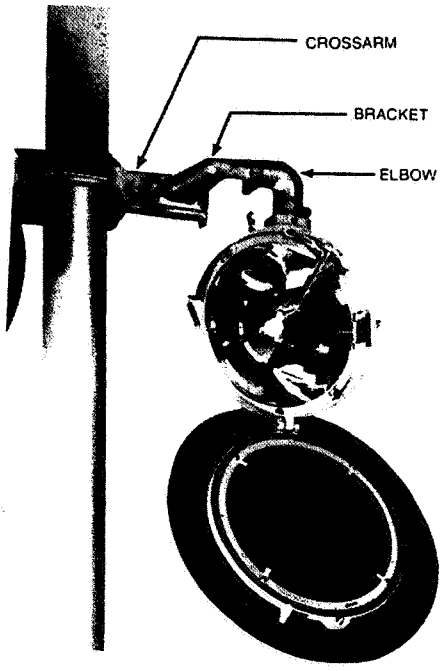

HC-120A Light Unit

Figure 3-3. Light Unit(s) Alignment

the old gasket carefully and replace any obviously aged or questionable gaskets to avoid possible leakage troubles in the future.

When the new roundel has been installed, check the signal unit for proper beam alignment on the highway approach per Section III. After the signal beam has been checked to agree with the sighter, observe the indication from the roundel. Signal units that do not produce a satisfactory alignment should be realigned as outlined in this manual.

b. Damaged Lamp Receptacles

Damaged lamp receptacles may not be visually evident. Changing or adjusting the lamp receptacle in the field is not recommended. The unit should be shopped to bring alignment of sighter and light beam into agreement, otherwise the misalignment of the light beam will provide alignment difficulties in the future.

c. Cracked or Broken Reflectors

Cracked or broken reflectors can be replaced in the field. Instead, however it is recommended that the unit be replaced and returned to the repair shop for replacement of reflector and readjustment of the lamp receptacle to assure most efficient output and proper alignment.

d. Damaged Case or Door

A damaged case, door, or other parts generally result in broken reflector, misplacement of lamp receptacle with attendant misalignment or the indication, reduction in efficiency or all of these troubles, and therefore shop repairs are required.

4.3 SHOP MAINTENANCE

When a junction box crossarm or signal light unit is returned to the shop it must be cleaned and inspected. Any part determined to be defective must be replaced.

4.3.1 Junction Box Crossarms

When brought into the shop for maintenance, perform the following operations:

a. Thoroughly clean and inspect all surfaces for damage. Check for missing parts and hardwared.

b. Inspect interior for signs of moisture.

c. Inspect gaskets for deterioration.

d. Check crossarm and attaching parts for breaks, cracks, or possible structural weakness.

4.3.2 Signal Light Units

When Signal Light Units are brought into the shop for maintenance, perform the following operations:

a. Thoroughly clean as directed by Section 4.2.1. Observe same precautions to avoid damaging roundels.

b. Inspect exterior for cracks or broken roundels, and physical condition of case and case cover.

c. Inspect interior for gaskets, lamp receptacles, wiring terminals, wire insulation and condition of reflectors.

4.3.3 Shop Alignment/Adjustment Procedures - HC-100 Light Unit

The following procedures cover socket adjustment and beam alignment.

a. Test Set-up

(1) A suitable adjustment test stand for supporting the signal unit firmly in position is required. This should be an aluminum crossarm which has a ball and socket type of adjustment. This arrangement provides simultaneous horizontal and vertical adjustments in one operation. It is convenient to have the crossarm rotate on its axis so the unit can be swung upward for the soldering operation required on the lamp receptacle. An arrangement of this kind is shown in Figure 4-1.

(2) The test stand should be located 50 feet from a vertical flat white screen.

(3) On the flat white screen, locate a beam target at the same height as the signal axis as shown in Figure 4-2.

(4) Place a small filament lamp at the location of the sighter target illustrated in Figure 4-2. This lamp may be in front of the screen or located behind a 1/2" diameter hole through the screen.

(5) Use a standard Precision base test lamp for setting the lamp receptacle.

CAUTION

AS A PRECAUTION, REMOVE THE TEST LAMP FROM THE SIGNAL BEFORE SOLDERING TO PREVENT DAMAGE TO THE LAMP.

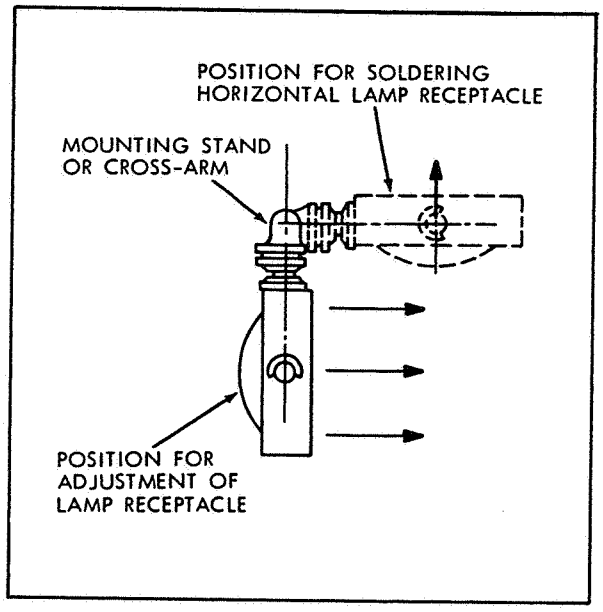

Figure 4-1. Signal Positions on Test Stand

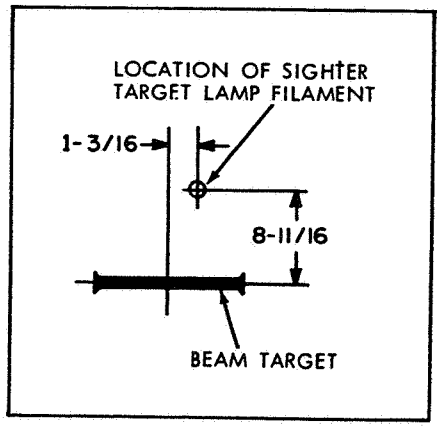

Figure 4-2. Location of Screen Targets

Check the test lamp periodically to assure of its accuracy and suitability as a test lamp. This can be accomplished by inserting the lamp in a unit which has been selected for use as a "standard" and is set aside and kept for the specific purpose of checking the test lamps and sighter alignment.

(6) Sighting tube accuracy can be checked readily by the following method: Mount a sighter socket (tapered) in a fixed position so that the sighter is aligned on a prominent object approximately 1/2 mile away. Rotate the sighter 180° in the socket and check the new sighting point of the cross hairs. If the new sighting position coincides with the original sighting on the distant object, the sighter is satisfactory. If it is not satisfactory, replace the sighter with one which is accurate and have the defective sighter corrected before it is used again to adjust or to align signals. (The long sighter N187827 is more convenient than the short sighter for adjusting signal units in the dark room.)

b. Adjustment of Lamp Socket

(1) Mount the signal unit in the test stand (Figure 4-1) located 50 feet from the flat white screen. Open the signal unit door for access to the lamp receptacle and its mounting.

(2) Insert the sighter in the sighter socket which is inside the signal case near the bottom and place the handle of the sighter in the vertical position. Then adjust the signal case on the crossarm (or suitable test stand) until the cross hairs of the sighter have the lighted target lamp filament divided into four parts. Clamp the signal unit in this position.

(3) After the signal unit is clamped in position, proceed to the alignment procedure which applies to the particular type of lamp receptacle bracket used in the unit.

c. Alignment Procedure for the Vertical Lamp Receptacle

NOTE

Before any adjustments are made, ensure that the insulated supports are tight to prevent lamp receptacle support from shifting.

(1) Place a standard lamp in the socket, loosen screw "A" (and lock nut) as shown in Figure 4-3A. Move the bracket in or out until maximum concentration of light beam is obtained; i.e., until the minimum size of image is obtained on the screen. This minimum image should be less than 30" in diameter at 50 feet and have a well defined outer edge. Also adjust the socket up and down for vertical beam alignment on the target. Temporarily tighten screw "A". Loosen screw "B" (and lock nut), adjust socket horizontally to center beam on target. Each adjustment effects the other, thus it may be necessary to repeat the adjustments several times before proper alignment is obtained.

(2) After satisfactory adjustment has been obtained, close the signal door and check the appearance of the indication on the red roundel to provide a completely illuminated or well filled roundel with no dark spots. If the indication is satisfactory, open the door and rotate the signal unit so the lamp receptacle support is in the horizontal position as shown in Figure 4-3A. Solder bracket "C" securely to the lamp receptacle support as shown in Figure 4-3B.

(3) After the socket has been soldered, check the light beam again with the sighter tube to ensure that the adjustment has not been altered during the soldering operation. If the alignment has changed, unsolder the bracket and realign the light beam to agree with the sighter. Resolder the bracket and then check the alignment again.

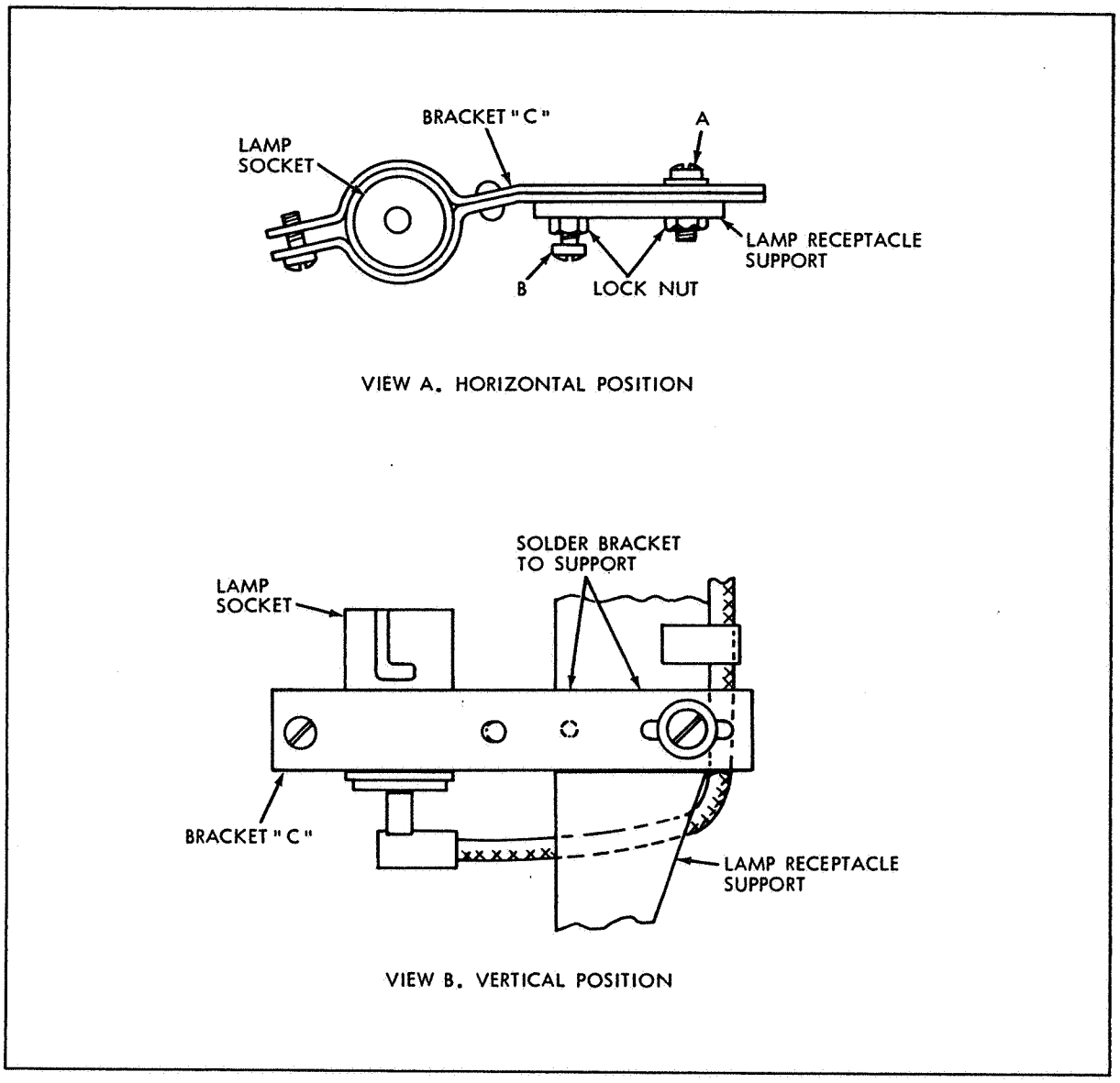

Figure 4-3. Alignment and Soldering of Lamp Receptacle Bracket

d. Alignment Procedure for the Horizontal Lamp Receptacle

(1) Place a standard lamp in the socket, loosen the screw holding the socket, rotate the socket so that lamp filament is horizontal, then move the socket in and out until the maximum concentration of light beam is obtained; i.e., until the minimum size of image is obtained on the screen. This minimum image should be less than 30" in diameter at 50 feet and have a well defined outer edge. Tighten the screw to hold the socket in this position. Adjust the concentration portion of the beam to be centered on the beam target by shifting the lamp receptacle supports on the insulated support, then tighten the supports, checking that the light beam remains on the beam target. Do not bend any portion of the lamp receptacle support

arms. Check the alignment of the sighter on the filament of the target lamp. If satisfactory, close the signal door to check the appearance of the indication on the red roundel to provide a completely illuminated or well filled roundel with no dark spots.

(2) Open the signal unit door, remove the test lamp and swing the unit up to the position shown in dotted lines in Figure 4-1. Before starting to solder the lamp receptacle, place a disc of corrugated cardboard over the reflector to protect the mirror surface from solder or tools which may be dropped into the signal unit. They can be dished to help keep it in place. Solder the socket securely to its support as shown in Figure 4-4.

(3) After the socket has been soldered, check the light beam again with the sighter to see that the adjustment has not been altered during the soldering operation. If the alignment has changed, unsolder the lamp socket and realign the light beam to agree with the sighter. Resolder the lamp socket and then check the alignment again.

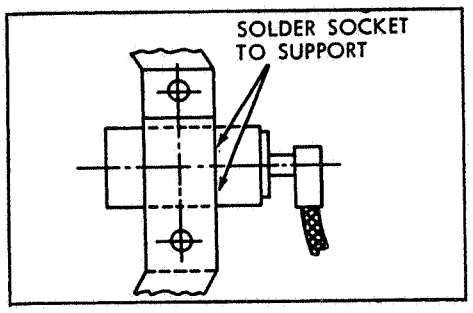

Figure 4-4. Soldering of Lamp Socket

4.3.4 Shop Adjustment/Alignment Procedures - HC-120A Light Unit

The following procedures cover socket adjustment and beam alignment.

a. Test Set-up

(1) A suitable adjustment test stand for supporting the signal unit firmly in position is required. This should be an aluminum crossarm which has a ball and socket type of adjustment. This arrangement provides simultaneous horizontal and vertical adjustments in one operation. An arrangement of this kind is shown in Figure 4-1.

(2) The test stand should be located 50 feet from a movable, vertical, flat, white screen. The plane of this screen should be parallel to the plane of the signal unit face.

(3) Place a beam target on the screen at the same height of the signal unit under test as shown in Figure 4-5.

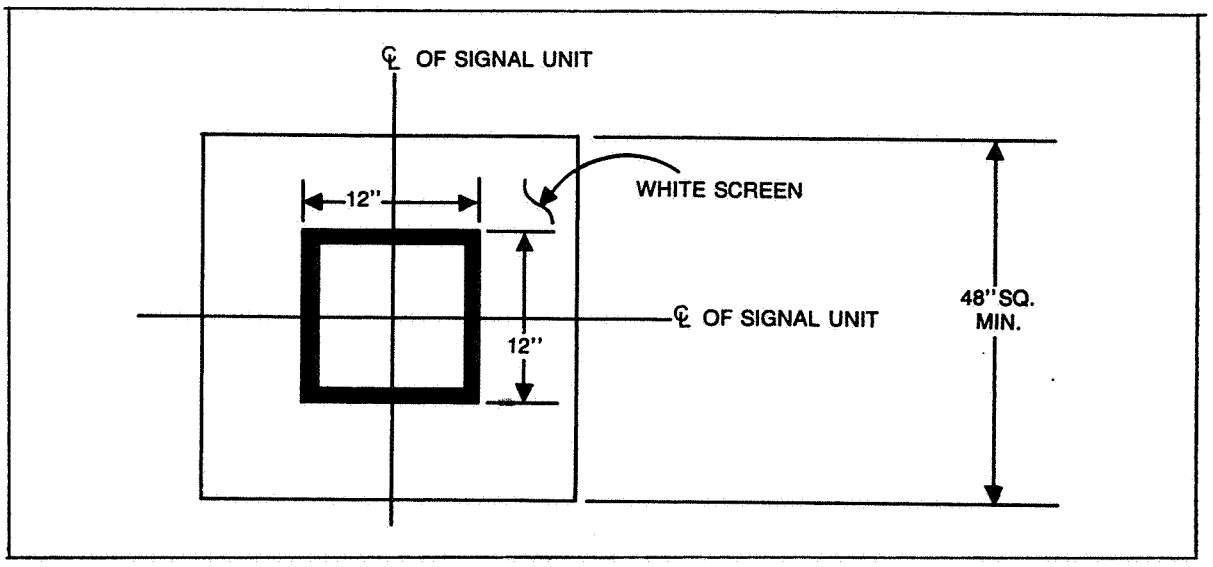

Figure 4-5. Target Description

(4) A mirror approximately two feet square should be behind the movable white screen. The mirror should be mounted to enable a beam of light shining from a signal unit mounted on the test stand (in a 0-0 position) to be reflected back to a viewing area. The person aligning signal units should be able to look through this viewing area and see the reflection of the signal's output beam. The mirror should be adjustable to change the position of the viewing area according to the person's height.

b. Adjustment of Lamp Socket (See Figure 4-6)

(1) Mount the signal unit in the test stand.

(2) Open signal unit cover.

(3) Install a 10 volt 18 watt bulb (J071463) in the socket.

(4) Apply 10 Vdc to the terminals at the wire ends.

NOTE

The lamp shall be positioned vertically and horizontally by adjusting the appropriate screws on the bracket. If necessary, the lamp socket clamp (N451498-2103) may be bent in order to bring the lamp into adjustment.

(5) Adjust the beam on the 12-inch target for the following characteristics:

(a) The beam shall be centered on the target.

(b) The target should be brightly illuminated with a minimum of dark spots.

(c) The beam pattern should be as round as possible.

NOTE

A beam pattern slightly larger than the 12-inch target generally provides the best results.

(6) After focusing, close the signal unit cover.

(7) Move the white screen with target away from the mirror.

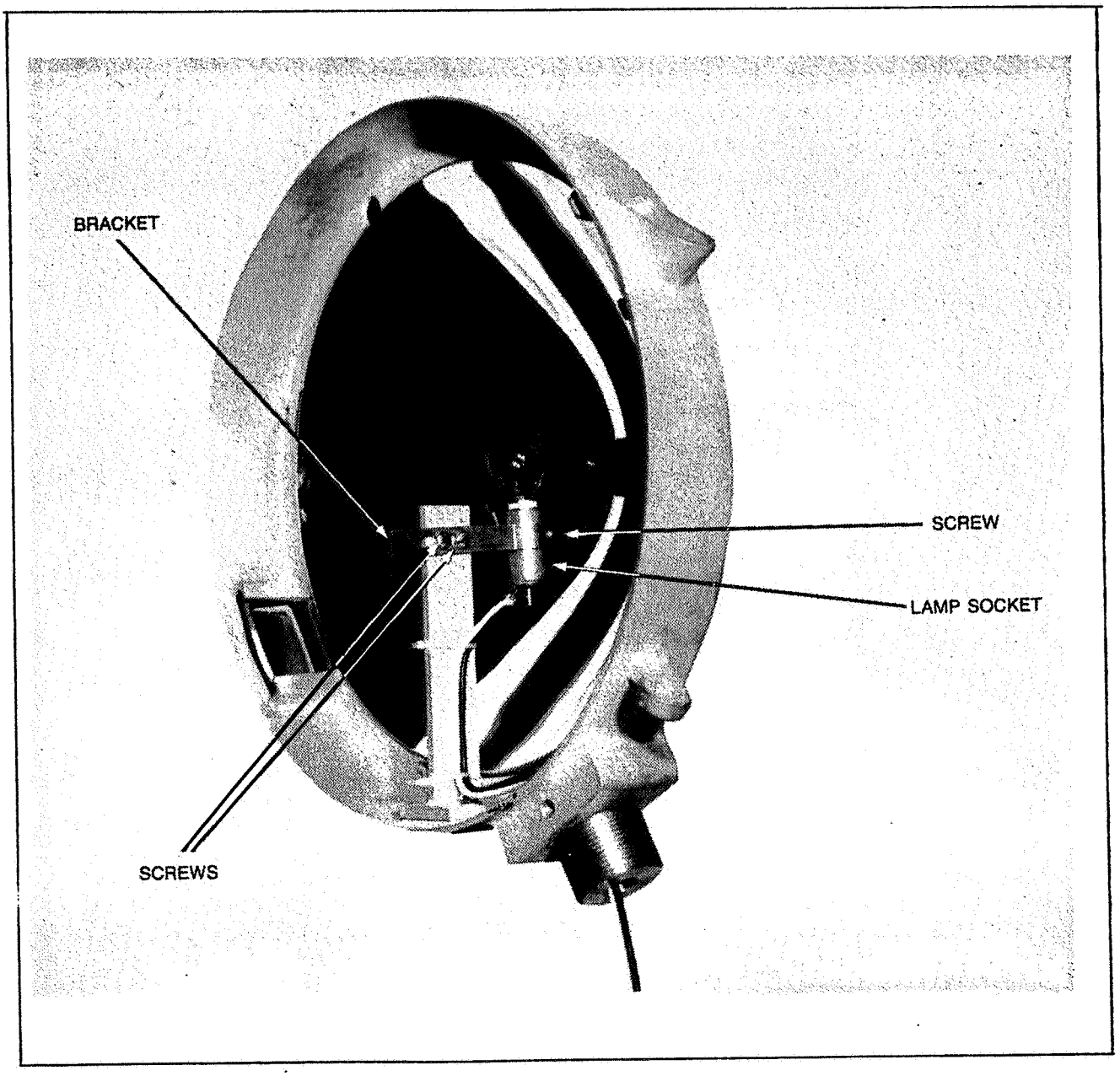

Figure 4-6. HC-120A Lamp Alignment

(8) Check the appearance of the red roundel's reflection in the mirror by looking at it through the viewing area. The roundel should be completely illuminated with no dark spots.

(9) If dark portions are apparent, the lamp must be adjusted until they are eliminated or minimized.

SECTION IV
MAINTENANCE

4.1 GENERAL

This section provides field and shop maintenance procedures. Field and shop maintenance include cleaning and inspection. Adjustment/alignment procedures for the HC-100 and HC-120A light units are given in shop maintenance.

4.2 FIELD MAINTENANCE

4.2.1 Cleaning

4.2.1.1 Equipment/Materials Required

a. Lint-free cloths
b. Soft bristle brush
c. Compressed air in aerosol can
d. Cleaning solvent
e. Commercial cleaning detergent

4.2.1.2 Light Units

a. Clean glass roundels and glass reflectors with a clean cloth moistened with a detergent solution. Wipe dry. Use an approved solvent for hard to remove dirt or grease.

b. Clean plastic roundels by flushing with clean water, using a chamois or soft cloth. Use a detergent for hard to remove dirt.

CAUTION

Do not use any solvents on plastic roundels.
Otherwise equipment damage will result.

c. Remove dirt from hoods and background with a damp cloth moistened in a detergent solution.

4.2.2 Inspection

In accordance with established intervals, inspect the Flashing Light Assembly for the following:

a. Damaged Roundel

A damaged roundel can be replaced and the signal restored to service after an inspection shows the lamp receptacle adjustment has not been disturbed. First, replace the damaged roundel. If the gasket has not been damaged, it may be reused. It is advisable, however, when replacing a roundel that has been in service for several years to check

SECTION V
APPLICATION DRAWINGS

Figure	Title	Page No.
5-1	XA-120 With 4" Aluminum Mast	5-3/5-4
5-2	XA-120 With 5" Pipe Mast	5-5/5-6
5-3	XA-120 With 4" Aluminum Mast	5-7/5-8
5-4	XA-120 With 4" or 5" Mast and Wood Gate Arm	5-9/5-10
5-5	Cantilever Assembly Tabulation	5-11/5-12
5-6	XA-120 For Cantilever (Model Z)	5-13/5-14
5-7	XA-120 With 10" O.D. Single or Double Mast Cantilever	5-15/5-16
5-8	HC-100, HC-120A on 4" and 11" O.D. Aluminum Cantilever Mast	5-17/5-18
5-9	HC-100, HC-120A on or 5" Mast and Wood Gate Arm	5-19/5-20
5-10	XA-120 with 2 or 4 Light HC-120A Assembly	5-21/5-22
5-11	XA-120 with 2 or 4 Light HC-100 Assembly	5-23/5-24

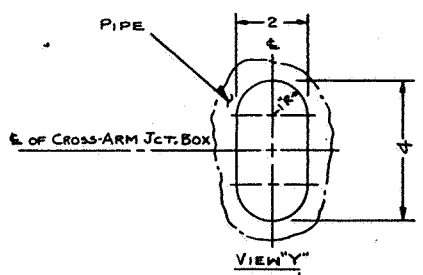

SIZE OF CUTOUT REQ'D. IN PIPE
(FOR FURTHER INFO SEE SEC. F-F)

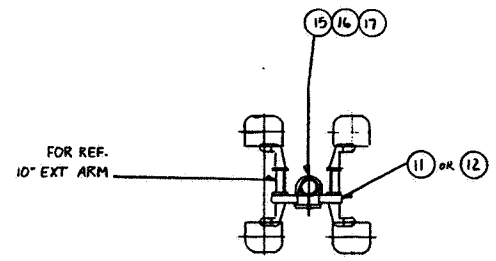

PLAN VIEW "A"
SHOWING JCT. BOX ASSY MTD. TO 4" AL. PIPE

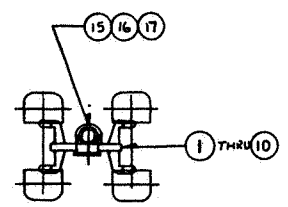

PLAN VIEW
SHOWING JCT. BOX ASSY. MOUNTED TO 4" AL. PIPE

VERTICAL & HORIZONTAL ADJUSTMENTS

HC-100

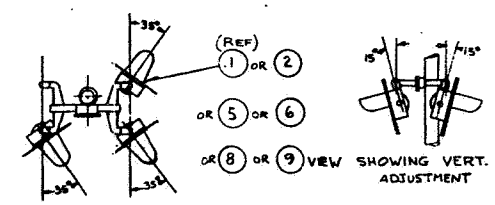

VIEW SHOWING HOR. ADJUSTMENT

SHOWING VERT. ADJUSTMENT

HC-120A

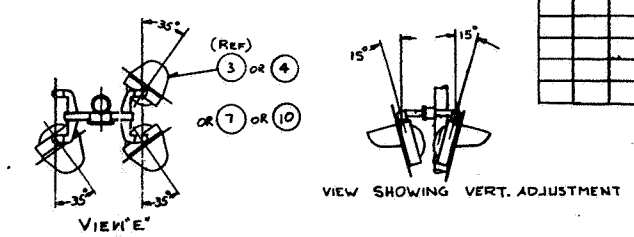

VIEW "E"
SHOWING HOR. ADJUSTMENT

VIEW SHOWING VERT. ADJUSTMENT

GROUP NUMBER 0113	0112	0111	0110	0109	0108	0107	0106	0105	0104	0103	0102	0101	ITEM No.	X	451506 PART IDENTIFICATION DRAWING	SEE NOTE PART NO.	SIGNALS DESCRIPTION	F	451506 '01 DRAWING DRAWING	SHEET	APPLICATION DWG	SHEET	VIEW
—	—	—	—	—	—	—	—	—	—	—	—	1	1	N	451506	1101	JCT. B & 2 HC-100 ASSY	F	451506	11			
—	—	—	—	—	—	—	—	—	—	—	1	—	2	N	451506	1103	JCT. B. & 4 HC-100 ASSY	F	451506	11			
—	—	—	—	—	—	—	—	—	—	1	—	—	3	N	451506	1001	JCT. B. & 2 HC-120A ASSY	F	451506	10			
—	—	—	—	—	—	—	—	—	1	—	—	—	4	N	451506	1003	JCT. B. & 4 HC-120A ASSY	F	451506	10			
—	—	—	—	—	—	—	—	1	—	—	—	—	5	N	451506	1107	JCT. B. & 2 HC-100 ASSY	F	451506	11			
—	—	—	—	—	—	—	1	—	—	—	—	—	6	N	451506	1108	JCT. B. & 2 HC-100 ASSY	F	451506	11			
—	—	—	—	—	—	1	—	—	—	—	—	—	7	N	451506	1007	JCT. B. & 2 HC-120 ASSY	F	451506	10			
—	—	—	—	—	1	—	—	—	—	—	—	—	8	N	451506	1109	JCT. B. & 4 HC-100 ASSY	F	451506	11			
—	—	—	—	1	—	—	—	—	—	—	—	—	9	N	451506	1110	JCT. B. & 4 HC-100 ASSY	F	451506	11			
—	—	—	1	—	—	—	—	—	—	—	—	—	10	N	451506	1010	JCT. B. & 4 HC-120 ASSY	F	451506	10			
—	1	—	—	—	—	—	—	—	—	—	—	—	11	N	451506	1005	JCT. B & 4 HC 120A ASSY	F	451506	10			
—	—	1	—	—	—	—	—	—	—	—	—	—	12	N	451506	1105	JCT. B & 4 HC-100 ASSY	F	451506	11			
1	—	—	—	—	—	—	—	—	—	—	—	—	13	N	451506	1012	JCT. Bx & 4 HC-120A ASSY	F	451506	10			
1	1	1	1	1	1	1	1	1	1	1	1	1	14	—	—	—	PRINT	F	451506	01			
1	1	1	1	1	1	1	1	1	1	1	1	1	15	M	392791		U-BOLT	B	39152	23			
2	2	2	2	2	2	2	2	2	2	2	2	2	16	J	480210	0156	NUT, 5/8-11 HEX. JAM	V	480210	01			
2	2	2	2	2	2	2	2	2	2	2	2	2	17	J	475132	0118	NSHR., 5/8 STL. PL.	V	475132	01			

29A	X	392931	0007	SIGN, CROSSING	D	66217	14			
30A	X	392930	0005	SIGN, (STOP ON RED)	D	66217	13			
31A	X	392929	0005	SIGN, (NO. OF TRACK)	D	66217	12			

THE FOLLOWING PARTS ARE OPTIONAL WHEN REQ'D. ORDER SEPARATELY

26	J	026104	—	CAP, PIPE	D	66217	1		
27	X	451542	0102	BELL, MOD. BA/10 (4 IN)	F	451542	01		
28	N	434390	—	MAST, SIGNAL	C	50037	56		13FT.-7
29	X	392931	0001	SIGN, CROSSING	D	66217	14		
30	X	392930	0001	SIGN (STOP ON RED)	D	66217	13		
31	X	392929	0001	SIGN (NO. OF TRACKS)	D	66217	12		
32	N	434391	—	MAST, SIG. (1) HOLE	C	50037	47		15FT.-3
33	N	434857	—	MAST, SIG. (2) HOLES	C	50037	47		30°-36°-42° 18FT.-3
34	N	432071	—	MAST, SIG. (2) HOLES	C	50037	47		30°-36°-42° 15FT.-3
35	N	438088	—	MAST, SIG. (2) HOLES	C	50037	47		150°-90°-30° 15FT.-3

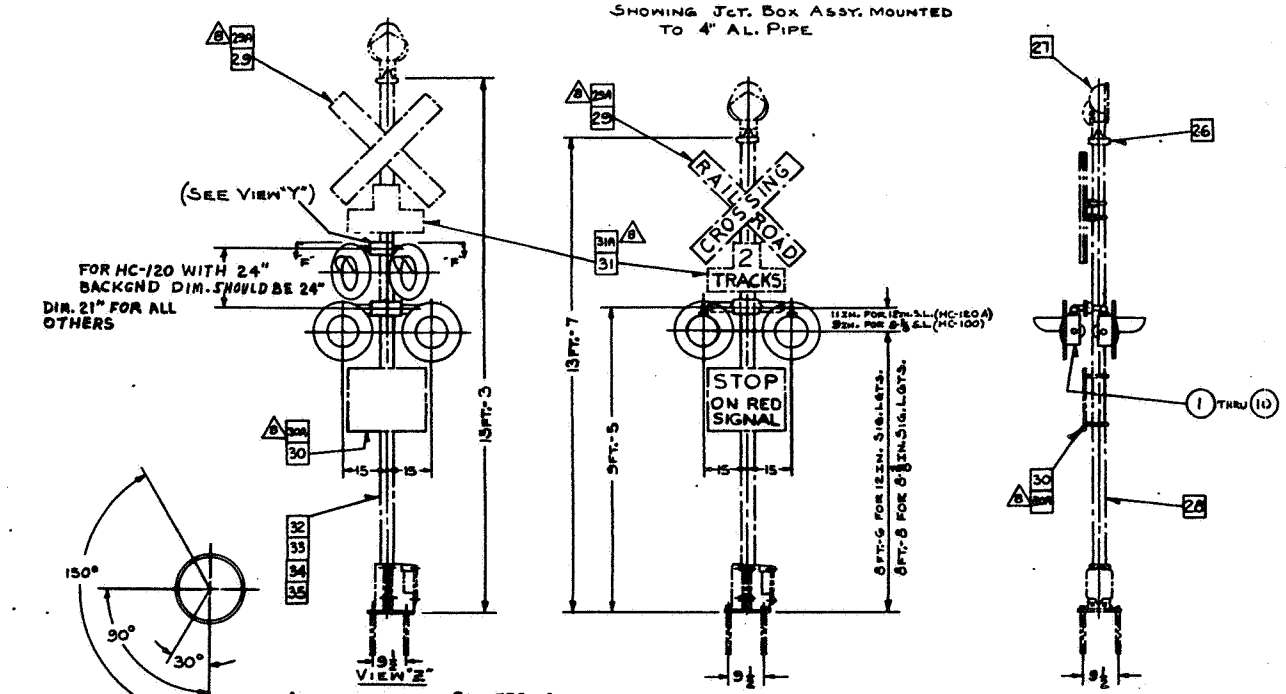

APPLICATION OF CONVERGING SIGNALS

SECTION "F-F"
VIEW SHOWING VARIOUS LOCATIONS OF CUTOUT FOR MT'G. CROSSARM ON MAST
(INTERMEDIATE ANGLES MAY BE OBTAINED BY ADJUSTING UNIT AS REQ'D.)
(SCALE: 3 IN. = 1 FT.)

Drawing F451506 Sh. 1, Rev. 10

ITEMS 29A, 30A & 31A ARE MADE WITH HI-INTENSITY "SCOTCHLITE" TAPE AND SHOULD BE ORDERED WHEN REQ'D.

FOR REF. ONLY
LAMP, 10V-18W (UJ 71463)
LAMP, 10V-25W (UJ 71574)
LAMP, 110V-25W (UJ 714054)

APPLICATION OF MODEL XA-120 JUNCTION BOX & CROSS-ARM FOR HIGHWAY CROSSING SIGNALS WITH TWO OR FOUR WAY FLASHING UNITS
(FOR 4" AL. PIPE)
(WITHOUT FOUNDATION BOLTS)

NOTES:

2. FOR APPLICATION DWG. SHOWING HWY. CROSS. SIGNALS MOUNTED TO CANTILEVER SEE F451506-SH.07
3. FOR APPLICATION DWG. SHOWING HWY. CROSS. SIGNALS MOUNTED TO 5" PIPE. SEE F451506-SH.03.
4. HOLES FOR CONVERGING SIGNALS PER VIEW "Z" & SECTION "F-F".
5. ALL COMPONENTS TO BE SHIPPED IN SAME CONTAINER.

PART NUMBER	DESCRIPTION	MATERIAL/APPLICATION
X451506-0113	SIGNALS, 4-UNIT XING	USING HC-120A (30°-15° LENS)
X451506-0112	SIGNALS, 4-UNIT CROSSING	USING HC-100 (30°-15° LENS) PER PLAN VIEW "E"
X451506-0111	SIGNALS, 4-UNIT CROSSING	USING HC-100 (30°-15° LENS) PER PLAN VIEW "E"
X451506-0110	SIGNALS, 4-UNIT CROSSING	USING HC-120A (30°-36° LENS)
X451506-0109	SIGNALS, 4-UNIT CROSSING	USING HC-100 30°-10° WITH 2 INCH HOT SPOT
X451506-0108	SIGNALS, 4-UNIT CROSSING	USING HC-100 (30°-36° LENS)
X451506-0107	SIGNALS, 2-UNIT CROSSING	USING HC-120A (30°-36° LENS)
X451506-0106	SIGNALS, 2-UNIT CROSSING	USING HC-100 30°-10° WITH 2 INCH HOT SPOT
X451506-0105	SIGNALS, 2-UNIT CROSSING	USING HC-100 (30°-36° LENS)
X451506-0104	SIGNALS, 4-UNIT CROSSING	USING HC-120A (30°-15° LENS)
X451506-0103	SIGNALS, 2-UNIT CROSSING	USING HC-120A (30°-15° LENS)
X451506-0102	SIGNALS, 2-UNIT CROSSING	USING HC-100 (30°-15° LENS)
X451506-0101	SIGNALS, 2-UNIT CROSSING	USING HC-100 (30°-15° LENS)

Figure 5-1. XA-120 With 4" Aluminum Mast

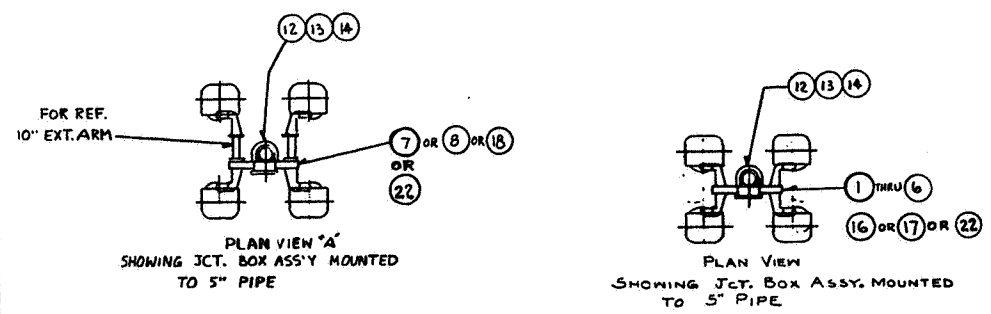

VERTICAL & HORIZONTAL ADJUSTMENTS

HC-100

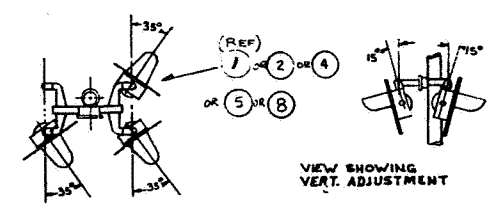

HC-120A

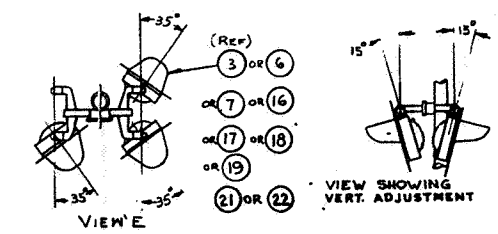

GROUP NUMBER													ITEM NO.	X 451506		SEE GROUP	SIGNALS	F 451506	03		APPLICATION	
1031A	1031B	1031C	1031	1030	1004	1006	1007	1006	1005	1004	1003	1002	1001		PART IDENTIFICATION NUMBER	SUFFIX	DESCRIPTION	DRAWING T	NUMBER	SHEET	SHEET	VIEW
—	—	—	—	—	—	—	—	—	—	—	—	—	1	1	N 451506	1101	JCT. B. & 2 HC-100 ASSY	F	451506	11		
—	—	—	—	—	—	—	—	—	—	—	—	1	—	2	N 451506	1108	JCT. B. & 2 HC-100 ASSY	F	451506	11		
—	—	—	—	—	—	—	—	—	—	—	1	—	—	3	N 451506	1001	JCT. B. & 2 HC-120A ASSY	F	451506	10		
—	—	—	—	—	—	—	—	—	—	1	—	—	—	4	N 451506	1103	JCT. B. & 4 HC-100 ASSY	F	451506	11		
—	—	—	—	—	—	—	—	—	1	—	—	—	—	5	N 451506	1110	JCT. B. & 4 HC-100 ASSY	F	451506	11		
—	—	—	—	—	—	—	—	1	—	—	—	—	—	6	N 451506	1003	JCT. B & 4 HC-120A ASSY	F	451506	10		
—	—	—	—	—	—	1	—	—	—	—	—	—	—	7	N 451506	1005	JCT. B & 4 HC-120A ASSY	F	451506	10		
—	—	—	—	—	—	—	1	—	—	—	—	—	—	8	N 451506	110E	JCT. B & 4 HC-100 ASSY	F	451506	11		
														9								
														10								
1	1	1	1	1	1	1	1	1	1	1	1	1	1	11	—	—	PRINT	F	451506	03		
1	1	1	1	1	1	1	1	1	1	1	1	1	1	12	H 397808		U-BOLT	B	35152	23		
2	2	2	2	2	2	2	2	2	2	2	2	2	2	13	J 480210	0156	NUT, 5/8-11 HEX JAM	V	480210	01		
2	2	2	2	2	2	2	2	2	2	2	2	2	2	14	J 475132	0118	WSHR., 5/8 STL. PL	V	475132	01		
—	—	—	—	—	1	—	—	—	—	—	—	—	—	16	N 451506	1011	BOX, JCT & 2 HC-120A	F	451506	10		
—	—	—	—	1	—	—	—	—	—	—	—	—	—	17	N 451506	1012	BOX, JCT & 4 HC-120A	F	451506	10		
—	—	—	1	—	—	—	—	—	—	—	—	—	—	18	N 451506	1013	BOX, JCT & 4 HC-120A	F	451506	10		
—	—	1	—	—	—	—	—	—	—	—	—	—	—	19	N 451506	1014	Box, Jct & 4 HC-120A	F	451506	10		
	1	—	—	—	—	—	—	—	—	—	—	—	—	21	N 451506	1015	BOX, JCT & 2 HC-120A	F	451506	10		
1	—	—	—	—	—	—	—	—	—	—	—	—	—	22	N 451506	1016	BOX, JCT & 4 HC-120A	F	451506	10		

NOTES:

1. PARTS SHOWN IN DOT & DASH INDICATES CUSTOMER'S EQUIPMENT.
2. FOR APPLICATION DWG. SHOWING HWY. CROSS. SIGNALS MOUNTED TO 4" PIPE, SEE F451506-SH.01.
3. FOR APPLICATION DWG. SHOWING HWY. CROSS. SIGNALS MOUNTED TO CANTILEVER, SEE F451506-SH.07.
4. FOR REF. ONLY:
   LAMP, 10V-18W (UJ71463)
   LAMP, 10V-25W (UJ71574)
   LAMP, 110V-25W (UJ714054)
5. ALL COMPONENTS TO BE SHIPPED IN THE SAME CONTAINER.

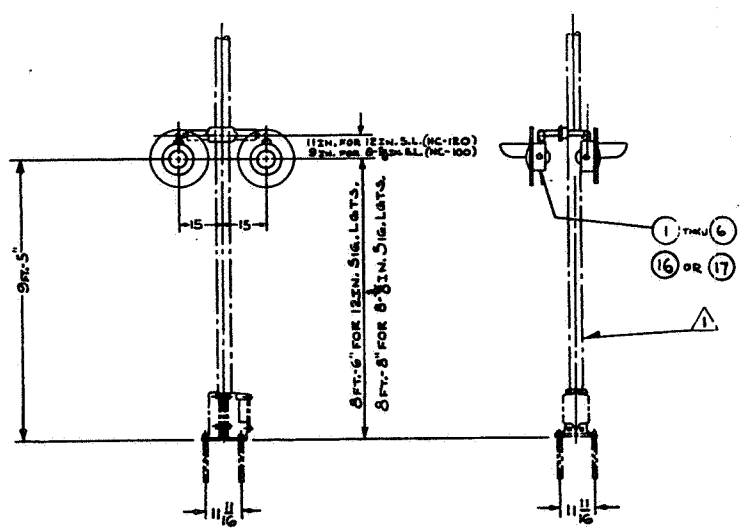

APPLICATION OF MODEL XA-120
JUNCTION BOX & CROSS-ARM FOR
HIGHWAY CROSSING SIGNALS
WITH TWO OR FOUR WAY FLASHING UNITS
(FOR 5" PIPE)
(WITHOUT FOUNDATION BOLTS)

Drawing F451506 Sh. 3, Rev. 10

PART NUMBER	DESCRIPTION	MATERIAL APPLICATION
X451506-0314	SIGNAL, 4-UNIT XING	USING HC-120A WITH 70"X 0" ROUNDEL
X451506-0313	SIGNAL, 2-UNIT XING	USING HC-120A WITH 70"X 0" ROUNDEL
X451506-0312	SIGNALS, 4-UNIT CROSSING	HC-120A 30"x15" FRONT LENS & 70"x0" BACK LENS
X451506-0311	SIGNALS, 4-UNIT CROSSING	HC-120A, 30x15, 24" BKGD.
X451506-0310	SIGNALS, 4-UNIT CROSSING	HC-120A, 30x15, 24 BKGD.
X451506-0309	SIGNALS, 4-UNIT CROSSING	HC-120A, 30x15, 24 BKGD.
X451506-0308	SIGNALS, 4-UNIT CROSSING	USING HC-120A (30"-15" LENS) PER PLAN VIEW "A"
X451506-0307	SIGNALS, 4-UNIT CROSSING	USING HC-120 (30"-15" LENS) PER PLAN VIEW "A"
X451506-0306	SIGNALS, 4-UNIT CROSSING	USING HC-120A (30"-15" LENS)
X451506-0305	SIGNALS, 4-UNIT CROSSING	USING HC-100 30"-10" WITH 2 INCH HOT SPOT
X451506-0304	SIGNALS, 4-UNIT CROSSING	USING HC-100 (30"-15" LENS)
X451506-0303	SIGNALS, 2-UNIT CROSSING	USING HC-120A (30"-15" LENS)
X451506-0302	SIGNALS, 2-UNIT CROSSING	USING HC-100 30"-10" WITH 2 INCH HOT SPOT
X451506-0301	SIGNALS, 2-UNIT CROSSING	USING HC-100 (30"-15" LENS)

Figure 5-2. XA-120 With 5" Pipe Mast

GROUP NUMBER						X	451506	SEE GROUP	SIGNALS	F	451506	06	APPLICATION	
			1 DEVICE	2 DEVICE	ITEM No.	T	PART IDENTIFICATION NUMBER	SUFFIX	DESCRIPTION	T	DRAWING NUMBER	SHEET	SUB SHEET	VIEW
			—	1	1	X	451415	0704	BOX JCT. & CROSSARM (4 LETS.)	F	451415	07		
			1	—	2	X	451415	0703	BOX JCT. & CROSSARM (2 LETS.)	F	451415	07		
			2	4	3	M	451498	2401	BACKGROUND (HC-120A)	D	451498	24		
			2	4	4	M	451498	2501	HOOD (HC-120A)	D	451498	25		
			2	4	5	N	451497	0303	(30°-15° DBL.) (HC-120A) SIGNAL HNT. CROSSING	R	451497	03		
			1	1	6	X	392931	001	SIGN, CROSSING	D	066217	14		
					7									
					8									
			1	1	9	W	439380		MAST, 4 in. ALUM.	C	500037	56		
			1	1	10	J	026104	—	CAP, PIPE	D	66217	1		
			1	1	11		——	—	PRINT	F	451506	06		
					12									
					13									
					14									
					15									
					16									
					17									

ITEMS SHOWN ☐ FOR REFERENCE ONLY								
18	X	392929	001	SIGN, (No. OF TRACKS)	D	66217	12	
19	X	392930	001	SIGN (STOP ON RED)	D	66217	13	
20								

VERTICAL & HORIZONTAL ADJUSTMENTS

HC-120A

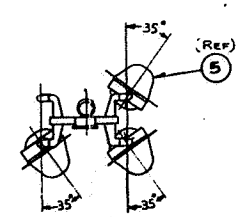

VIEW 'E'
SHOWING HORIZONTAL ADJUSTMENT

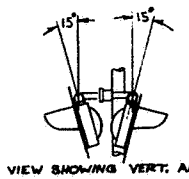

VIEW SHOWING VERT. ADJUSTMENT

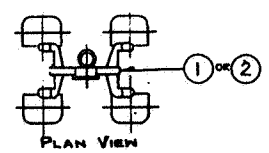

PLAN VIEW
SHOWING JCT. BOX ASSY. MOUNTED TO 4" AL. PIPE

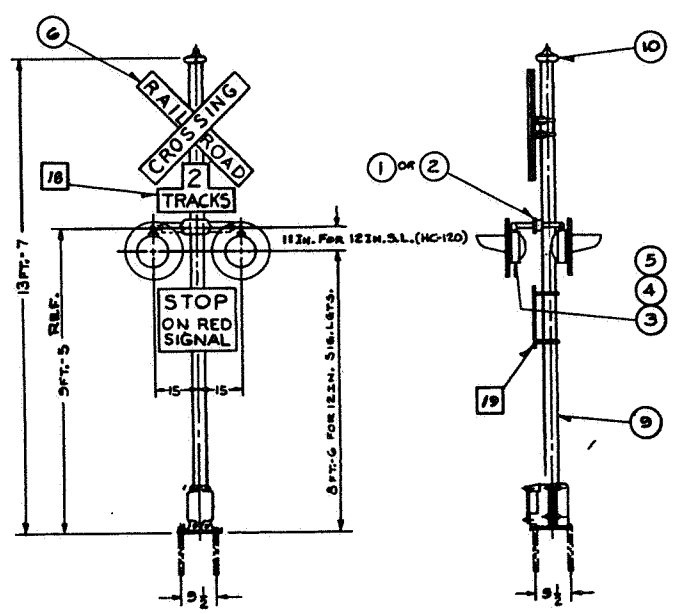

Drawing F451506 Sh. 6, Rev. 2

APPLICATION OF MODEL XA-120 JUNCTION BOX & CROSS-ARM FOR HIGHWAY CROSSING SIGNALS
WITH TWO OR FOUR WAY FLASHING UNITS
(FOR 4" AL. PIPE)
(WITHOUT FOUNDATION BOLTS)

NOTES:
1. FOR OTHER SIGNAL VARIANCES USING 4" PIPE SEE F451506-01
2. (FOR REF. ONLY)
LAMP, 10V - 18W (UJ71463)
LAMP, 10V - 25W (UJ71574)
LAMP, 110V - 25W (UJ714054)

PART NUMBER	DESCRIPTION	MATERIAL/SPECIFICATION
X451506 0602	SIGNALS, 2-UNIT CROSSING	USING HC-120A (30°-15° LENS)
X451506 0601	SIGNALS, 4-UNIT CROSSING	USING HC-120A (30°-15° LENS)

Figure 5-3. XA-120 With 4" Aluminum Mast

Group Number						Item No.		Part Identification		Description		Drawing	
							X	451506	SEE NOTE	SIGNALS	F	451506	04
0406	0405	0404	0403	0402	0401								
1	1	1	1	1	1	1	N	451415	0302	BOX, JCTN & CROSS-ARM (4 UNITS)	F	451415	03
—	—	4	—	—	4	2	N	394817		SIGNAL, HWY. CROSSING (30°-15° DEF.) (8-3/8")	F	80170	01
—	4	—	—	4	—	3	N	437283		SIGNAL, HWY. CROSSING (30°-15° DEF.) (8-3/8")	F	80170	01
						4							
—	4	4	—	4	4	5	M	390713	—	BACKGROUND (8-3/8")	D	66217	06
—	4	4	—	4	4	6	M	390714	—	HOOD (8-3/8")	D	66217	07
4	—	—	4	—	—	7	N	451497	0103	SIGNAL, HWY. CROSSING (30°-15° DEF.) (12")	R	451497	01
4	—	—	4	—	—	8	M	451498	0402	BACKGROUND (12")	D	451498	04
4	—	—	4	—	—	9	N	451498	0203	HOOD (12")	D	451498	02
—	—	—	1	1	1	10	M	392791	—	BOLT, 5/8" U (4" PIPE)	B	35152	23
1	1	1	—	—	—	11	M	397808	—	BOLT, 5/8" U (5" PIPE)	B	35152	23
2	2	2	2	2	2	12	J	475132	0118	WASHER, 5/8" FL. STL. GALV.	V	475132	01
2	2	2	2	2	2	13	J	480210	0156	NUT, 5/8-11 HEX. STL. GALV.	V	480210	01
1	1	1	1	1	1	14		—	—	PRINT	F	451506	04

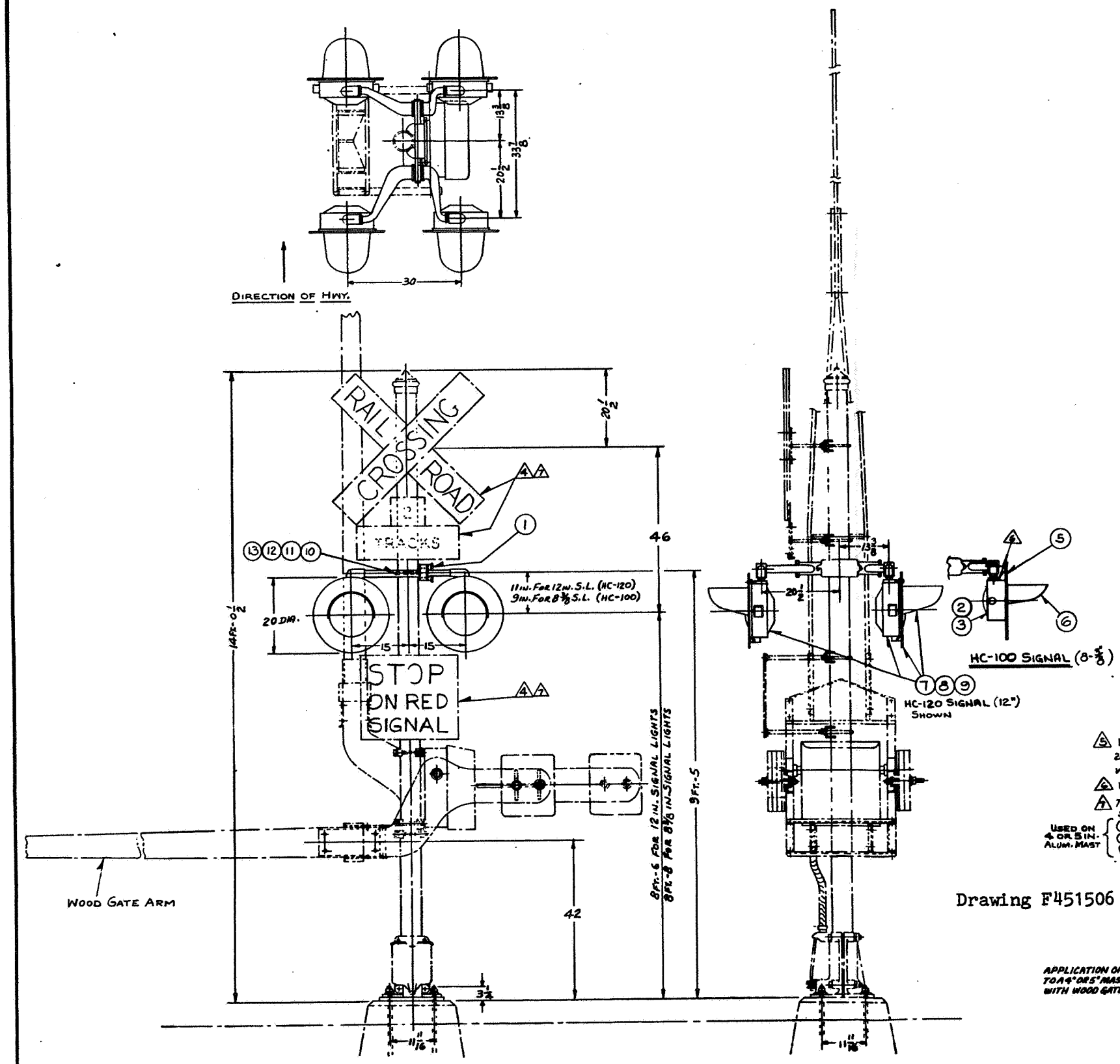

(FOR REF ONLY)
LAMP, 10V-18W (UJ71463)
LAMP, 10V-25W (UJ71574)
LAMP, 110V-25W (UJ714054)

5 HC-100 HWY. CROSSING SIGNALS WITH 20° SPREADLITE & 10° VERTICAL DEFLECTION WITH 2 IN. HOT SPOT. (WIRED)

6 LAMP SUPPORT FURNISHED WITH ITEMS 2 & 3

7 THE FOLLOWING PARTS ORDERED AS REQ'D: SIGNS WITH HI-INTENSITY REFLECTIVE "SCOTCHLITE" TAPE

USED ON 4 OR 5 IN. ALUM. MAST:
- (NO. OF TRACKS) SIGN, X437997-001, D66217-SH.12A
- (STOP ON RED) SIGN X438077-001, D66217-SH.13A
- (RAILROAD CROSS.) SIGN, X438002-003, D66217-SH.14B

Drawing F451506 Sh. 4, Rev. 6

APPLICATION OF MODEL XA-120 JUNCTION BOX & CROSS ARM TO A 4" OR 5" MAST WITH A GATE MECHANISM EQUIPPED WITH WOOD GATE ARM.

NOTES:

1 UNLESS OTHERWISE SPECIFIED, DIMENSIONS ARE FOR REF. ONLY.

2 PARTS SHOWN IN DOT & DASH — ORDER AS REQ'D.

3 ALL HWY. CROSSING SIGNALS (ITEMS 2, 3 & 7) WIRED COMPL. FOR MOUNTING.

4 THE FOLLOWING PARTS ORDERED AS REQ'D.: SIGNS WITH ENGINEER GRADE REFLECTIVE "SCOTCHLITE" TAPE

USED ON 4 OR 5 IN. ALUM. MAST:
- (NO. OF TRACKS) SIGN X437997-D66217-SH.12A
- (STOP ON RED SIG.) SIGN X438077-D66217-SH.13A
- (RAILROAD CROSS.) SIGN X438002-002-D66217-SH.14B
- (STOP ON RED SIG.) SIGN X438077-002-D66217-SH.13A

Part Number	Description	Material Specification
X451506-0406	SIGNALS, 4-UNIT CROSSING	USING 12" LGT. (30° 15° DEF.) 5" PIPE
X451506-0405	SIGNALS, 4-UNIT CROSSING	USING 8-3/8" LGT. 4 5" PIPE
X451506-0404	SIGNALS, 4-UNIT CROSSING	USING 8-3/8" LGT. (30° 15° DEF.) 5" PIPE
X451506-0403	SIGNALS, 4-UNIT CROSSING	USING 12" LGT. (30° 15° DEF.) 4" PIPE
X451506-0402	SIGNALS, 4-UNIT CROSSING	USING 8-3/8" LGT. 4 4" PIPE
X451506-0401	SIGNALS, 4-UNIT CROSSING	USING 8-3/8" LGT. (30° 15° DEF.) 4" PIPE

Figure 5-4. XA-120 With 4" or 5" Mast and Wood Gate Arm

	-0934	-0933	-0932	-0931	-0930	-0929	-0928	-0927	-0926	-0925	-0924	-0914	-0913	-0912	-0911	-0910	-0909	-0906	-0907	-0906	-0905	-0904	Item No.	PART NUMBER	DESCRIPTION	DWG.	Sh.
36' CANTILEVER ASS'Y. WITH CW BLT. & HC-120A S/G.																											
34' CANTILEVER ASS'Y. WITH CW BLT. & HC-120A S/G.																											
32' CANTILEVER ASS'Y. WITH CW BLT. & HC-120A S/G.																											
30' CANTILEVER ASS'Y. WITH CW BLT. & HC-120A S/G.																											
28' CANTILEVER ASS'Y. WITH CW BLT. & HC-120A S/G.																											
26' CANTILEVER ASS'Y. WITH CW BLT. & HC-120A S/G.																											
24' CANTILEVER ASS'Y. WITH CW BLT. & HC-120A S/G.																											
22' CANTILEVER ASS'Y. WITH CW BLT. & HC-120A S/G.																											
20' CANTILEVER ASS'Y. WITH CW BLT. & HC-120A S/G.																											
18' CANTILEVER ASS'Y. WITH CW BLT. & HC-120A S/G.																											
16' CANTILEVER ASS'Y. WITH CW BLT. & HC-120A S/G.																											
1	CW 16	16' CANT. ASSY. W/19"x19 BLT. S.P.		
2	CW 18	18' CANT. ASSY. W/19"x19 BLT. S.P.		
3	CW 20	20' CANT. ASSY. W/19"x19 BLT. S.P.		
4	CW 22	22' CANT. ASSY. W/19"x19 BLT. S.P.		
5	CW 24	24' CANT. ASSY. W/19"x19 BLT. S.P.		
6	CW 26 ⚠	26' CANT. ASSY. W/19"x19 BLT. S.P.		
7	CW 28	28' CANT. ASSY. W/19"x19 BLT. S.P.		
8	CW 30	30' CANT. ASSY. W/19"x19 BLT. S.P.		
9	CW 32	32' CANT. ASSY. W/19"x19 BLT. S.P.		
10	CW 34	34' CANT. ASSY. W/19"x19 BLT. S.P.		
11	CW 36	36' CANT. ASSY. W/19"x19 BLT. S.P.		
12	X451506-0711	X-BUCK & HDWD. 10" M ENG.	R451506	07
13	X451506-0705	JB FOR 10" M & 2/HC120 A	R451506	07
14	X451506-0702	JB FOR 10" M & 4/HC120 A	R451506	07
15	X451506-0708	JB FOR 4" T. & 4/HC120 A	R451506	07

⚠ CW CANTILEVERS TO BE ORDERED BY S.M.U.E. & SHIPPED SEPERATELY

Drawing F451506 Sh. 9, Rev. 1

X451506-[illegible]	CANT. ASS'Y.	
PART NUMBER	DESCRIPTION	MATERIAL/SPECIFICATION

Figure 5-5. Cantilever Assembly Tabulation

| QUANTITY | | |

| Group Number | | |

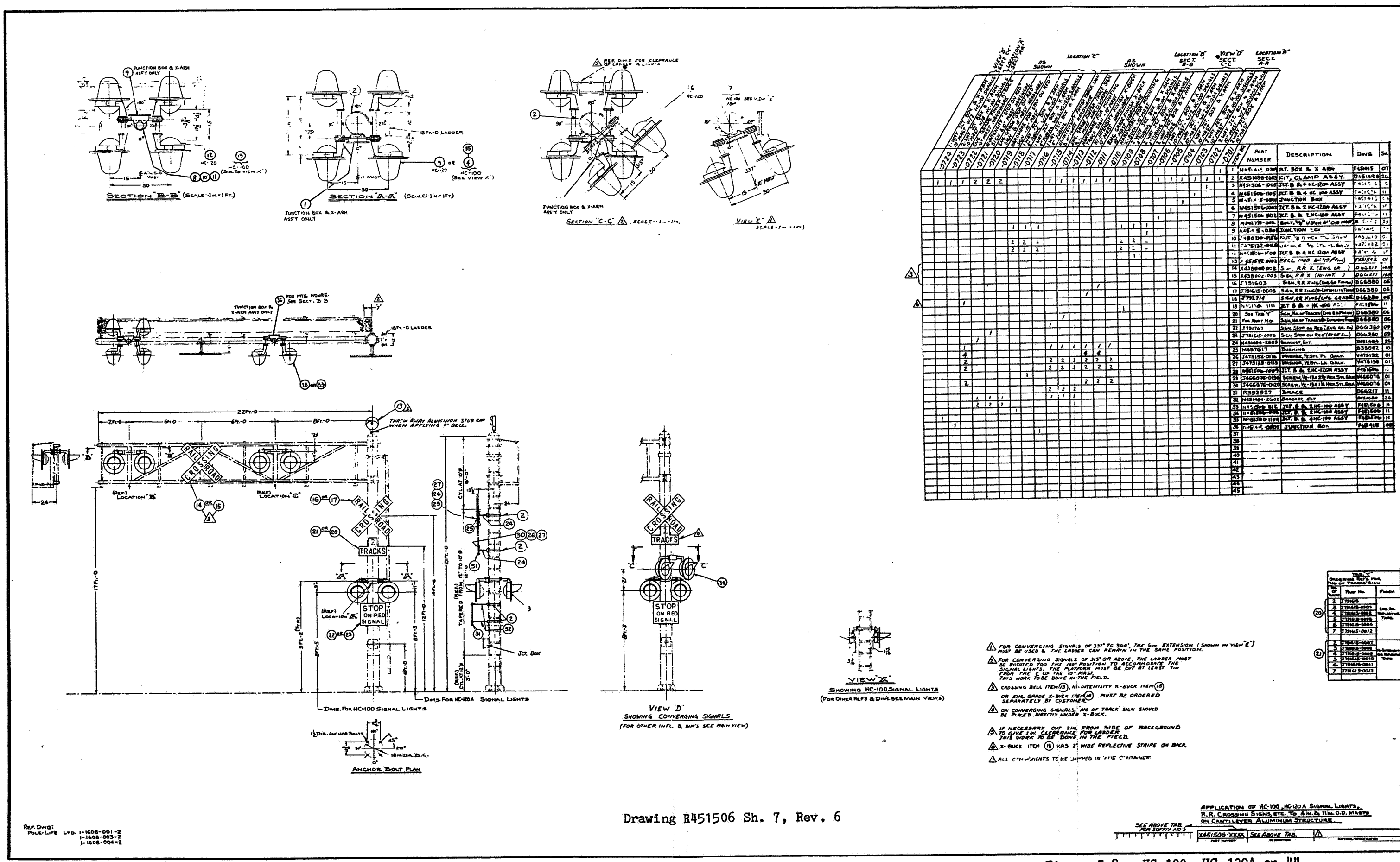

Drawing R451506 Sh. 7, Rev. 6

Figure 5-8. HC-100, HC-120A on 4" and 11" O.D. Aluminum Cantilever Mast

QUANTITIES														
GROUP VI	GROUP V	GROUP IV	GROUP III	GROUP II	GROUP I	ITEM NUMBER	PART IDENTIFICATION PREFIX	NUMBER	SUFFIX	SEE GROUP	DESCRIPTION	DRAWING TYPE	NUMBER	SHEET	SEQ
												F	451506	08	
—	1	—	1	—	1	1	SEE OTHER TAB				JCT. BOX & CROSS ARMS (4-UNIT) △1	F	451415	06	
1	—	1	—	1	—	2	SEE OTHER TAB				JCT. BOX & CROSS ARMS (2-UNIT) △1	F	451415	06	
—	—	—	—	2	4	3	X	451497	0304		LIGHT, HC-120 HIGHWAY SIGNAL	R	451497	03	
—	—	2	4	—	—	4	N	394817			LIGHT, HC-100 HIGHWAY SIGNAL	F	80170	1	
2	4	—	—	—	—	5	X	451497	0308		LIGHT, HC-120A W/24" BKGDS	R	451497	03	
—	—	2	4	—	—	6	M	390713			BACKGROUND	D	66217	6	
—	—	2	4	—	—	7	M	390714			HOOD	D	66217	7	

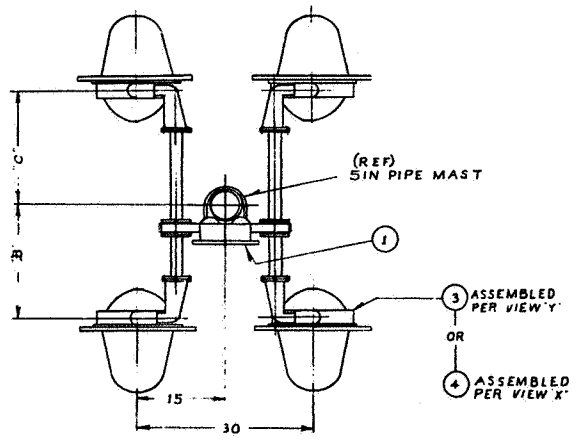

4-UNIT JCT. BOX & CROSS ARMS WITH SIGNAL LIGHTS

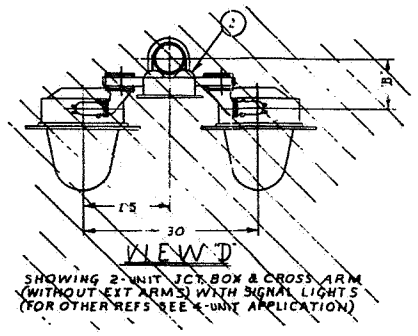

VIEW 'D'

SHOWING 2-UNIT JCT. BOX & CROSS ARM (WITHOUT EXT ARMS) WITH SIGNAL LIGHTS (FOR OTHER REFS SEE 4-UNIT APPLICATION)

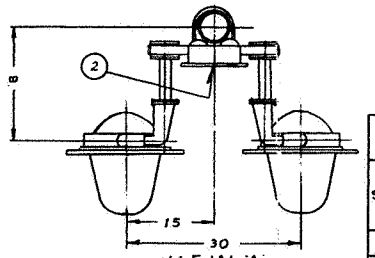

VIEW 'A'

SHOWING 2-UNIT JCT. BOX & CROSS ARM WITH SIGNAL LIGHTS

HIGHWAY SIGNAL LIGHTS & CROSS ARM UNITS COMPL. (WITHOUT LAMP)

SUPERSEDED BY	SBM SIGNAL LIGHTS & CROSS ARM UNITS X451506-	ASSEMBLY: 4-UNIT AS SHOWN	ASSEMBLY: 2-UNIT PER VIEW	ASSEMBLY: ITEMS PER GROUP	SIGNAL LIGHTS: STYLE	SIGNAL LIGHTS: PER VIEW	JCT. BOX & CROSS ARM 4-UNIT △1: F451414	SH	DIM "B"	DIM "C"	JCT. BOX & CROSS ARM 2-UNIT △2: F451415	SH	DIM "B"	REMARKS	USED WITH WOOD GATE ARMS: LGTH 14FT/38FT	WIDTH 16 IN	LGTH 33FT/44FT	WIDTH 21 1/4 IN	GEN DWG F451463
-0802	~~-0801~~	~~As shown~~	—	~~I~~	~~HC-120~~	~~"Y"~~	~~X451415-0604~~	~~06~~	~~10 1/2~~	~~17 1/2~~	—	—	—	—	—	✓	—	—	~~5, 05~~
	-0802	AS SHOWN	—	I	HC-120A	"Y"	X451415-0714	07	17 7/8	20 1/8	—	—	—	—	✓		✓		SH.05, SH.15
	-0803	—	"A"	II	HC-120A	"Y"	—	—	—	—	X451415-0710	07	17 7/8		✓		✓		SH.05, .15
-0803	~~-0804~~		~~"A"~~	~~II~~	~~HC-120~~	~~"Y"~~	—	—	—	—	~~X451415-0603~~	~~06~~	~~12 1/2~~		—		~~✓~~		~~SH.05, SH.15~~
-0803	~~-0805~~		~~"A"~~	~~II~~	~~HC-120~~	~~"Y"~~	—	—	—	—	~~X451415-0602~~	~~06~~	~~14 1/2~~		—		~~✓~~		~~SH.15~~
~~X451506-0303 F451506-SH.3~~	~~-0806~~		~~"D"~~	~~II~~	~~HC-120~~	~~"Y"~~	—	—	—	—	~~X451415-0605~~	~~02~~	~~4 1/2~~		—		~~✓~~		~~SH.15~~
-0808	~~-0807~~	~~AS SHOWN~~	—	~~III~~	~~HC-100~~	~~"X"~~	~~X451415-0604~~	~~06~~	~~10 1/2~~	~~17 1/2~~					✓				~~SH.05~~
	-0808	AS SHOWN	—	III	HC-100	"X"	X451415-0714	07	17 7/8	20 1/8	—	—	—		✓		✓		SH.05, SH.15
	-0809	—	"A"	IV	HC-100	"X"	—	—	—	—	X451415-0710	07	17 7/8		✓		✓		SH.05, .15
-0809	~~-0810~~	—	~~"A"~~	~~IV~~	~~HC-100~~	~~"X"~~	—	—	—	—	~~X451415-0603~~	~~06~~	~~12 1/2~~		—		~~✓~~		~~SH.05, SH.15~~
-0809	~~-0811~~	—	~~"A"~~	~~IV~~	~~HC-100~~	~~"X"~~	—	—	—	—	~~X451415-0602~~	~~06~~	~~14 1/2~~		—		~~✓~~		~~SH.15~~
~~X451506-0301 F451506-SH.3~~	~~-0812~~		~~"D"~~	~~IV~~	~~HC-100~~	~~"X"~~	—	—	—	—	~~X451415-0605~~	~~03~~	~~4 1/2~~		—		~~✓~~		~~SH.15~~
	-0813	AS SHOWN	—	V	HC-120A	"Y"	X451415-0714	07	17 7/8	20 1/8	—	—	—	HC-120AS W/24" BKGDS	✓		✓		SH.05, .15
	-0814	—	"A"	VI	HC-120A	"Y"	—	—	—	—	X451415-0710	07	17 7/8	HC-120AS W/24" BKGDS.	✓		✓		SH.05, .15

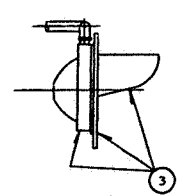

VIEW 'Y'

SHOWING ASSEMBLY OF HC-120A SIGNAL LIGHTS

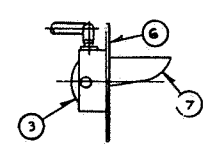

VIEW "X"

SHOWING ASSEMBLY OF HC-100 SIGNAL LIGHTS

NOTES:

△1 ITEMS (1) & (2) ARE COMPL. WITH "U" BOLTS FOR 5 IN. PIPE MAST.

2. FOR REF ONLY:
   LAMP, 10V-18W (J7463)
   LAMP, 10V-25W (J71574)

Drawing F451506 Sh. 8, Rev. 3

HIGHWAY CROSSING SIGNALS
TWO OR FOUR WAY UNITS
FOR USE WITH WOODEN GATE ARMS AND 5" MASTS

SEE OTHER TAB. FOR SUFFIX NO'S

X451506-XXXX	HC SIGNALS AND CROSS ARM ASSY.
PART NUMBER	DESCRIPTION

Figure 5-9. HC-100, HC-120A on 5" Mast and Wood Gate Arm

SUFFIX NO.	QTY. OF SIGNAL LT.	ITEMS PER GROUP	ASSY AS SHOWN	WIRE PER VIEW	HC-120A SIG. (1)	JCT BOX/XARM (2)		REMARKS
					R451497-SH.03	F451415	SH	
-1001	2	I	✓	"E"	N451497-0303	N451415-0701	7	W/30" X 15" ROUNDEL
-1002	2	I	VIEW "A"	"E"	N451497-0303	N451415-0801	8	W/30" X 15" ROUNDEL
-1003	4	II	VIEW "B"	"F"	N451497-0303	N451415-0702	7	W/30" X 15" ROUNDEL
-1005	4	II	VIEW "C"	"F"	N451497-0303	N451415-0709	7	W/30" X 15" ROUNDEL
-1007	2	I	✓	"E"	N451497-0301	N451415-0701	7	W/20" X 32" ROUNDEL
-1008	4	II	VIEW "D"	"F"	N451497-0301	N451415-0804	8	W/20" X 32" ROUNDEL
-1009	2	I	VIEW "G"	"E"	N451497-0301	N451415-08C5	8	W/20" X 32" ROUNDEL
-1010	4	II	VIEW "B"	"F"	N451497-0301	N451415-0702	7	W/20" X 32" ROUNDEL
-1011	2	III	✓	"E"	N451477-0303	N451415-0701	7	30"X15" ROUNDELS SIGNALS W/24" BKGDS.
-1012	4	IV	VIEW "B"	"F"	N451497-0303	N451415-0702	7	30"X15" ROUNDELS SIGNALS W/24" BKGDS.
-1013	4	IV	VIEW "C"	"F"	N451497-0303	N451415-0703	7	30"X15 ROUNDELS SIGNALS W/24" BKGDS.
-1014	4	V	VIEW "H"	"F"	N451497-0303	N451415-0709	7	1/30"X15 FRONT ROUNDELS & 70"X0" BACK ROUNDELS
-1015	2	I	✓	"E"	N451497-0305	N451415-0709	07	WITH 70"X0" ROUNDEL
-1016	4	II	VIEW "C"	"F"	N451497-0305	N451415-0709	07	WITH 70"X0" ROUNDEL

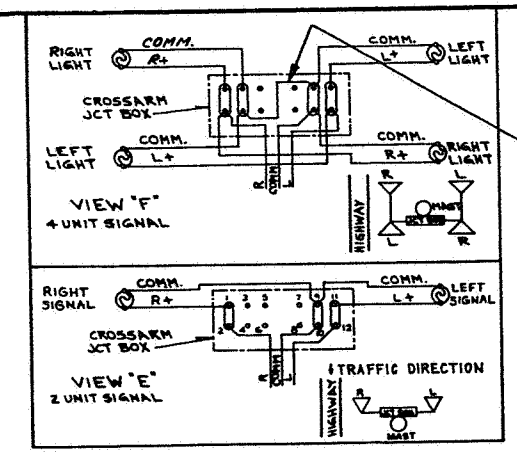

GROUP "A" U/M	QUANTITY UNITS	QUANTITY DEC.	GROUP "B" U/M	QUANTITY UNITS	QUANTITY DEC.	GROUP "C" U/M	QUANTITY UNITS	QUANTITY DEC.	GROUP "D" U/M	QUANTITY UNITS	QUANTITY DEC.	GROUP "E" U/M	QUANTITY UNITS	QUANTITY DEC.	ITEM NUMBER	PART IDENTIFICATION T	NUMBER	SUFFIX	DESCRIPTION	DRAWING T	NUMBER	SHEET
																N	451506	SEE GROUP	JCT BOX & HC-120A ASSY	D	451506	10
I	2.		I	4.		I	2.		1	4.		I	2.		1		SEE TAB		SIG. HC-120A HWG XING	R	451497	03
I	1.		I	1.		I	1.		1	1.		1	1.		2		SEE TAB		JCT BOX/XARM		SEE TAB	
B	.833		B	.833			—		B	.833			—		3	A	045525	0007	#16 WIRE			
I	2.		I	2.			—		I	2.			—		4	J	730044	—	TERMINALS			
I	2.			—			—						—		5	N	451497	0305	SIG. HC-120A HWG XING	R	451497	03
I	4.			—			—		I	4		I	2.		10	M	451498	2401	BACKGROUND 20"	D	451498	24
I	4.		I	4.		I	2.		1	4.		1	2.		11	M	451498	2501	HOOD	D	451498	25
	—		I	4.		I	2.		I	—			—		13	M	451498	2402	BACKGROUND 24"	D	451498	24

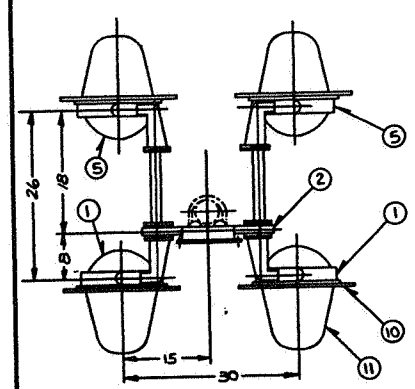

VIEW "H"
4 UNIT SIGNAL WITH NO FRONT EXT. & 10" BACK EXT.
(SCALE: 1 IN. = 1 FT.)

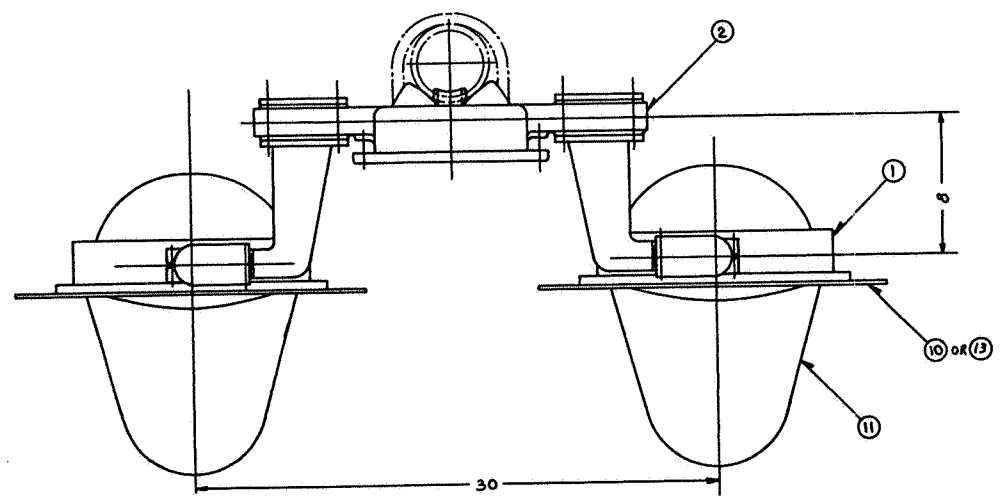

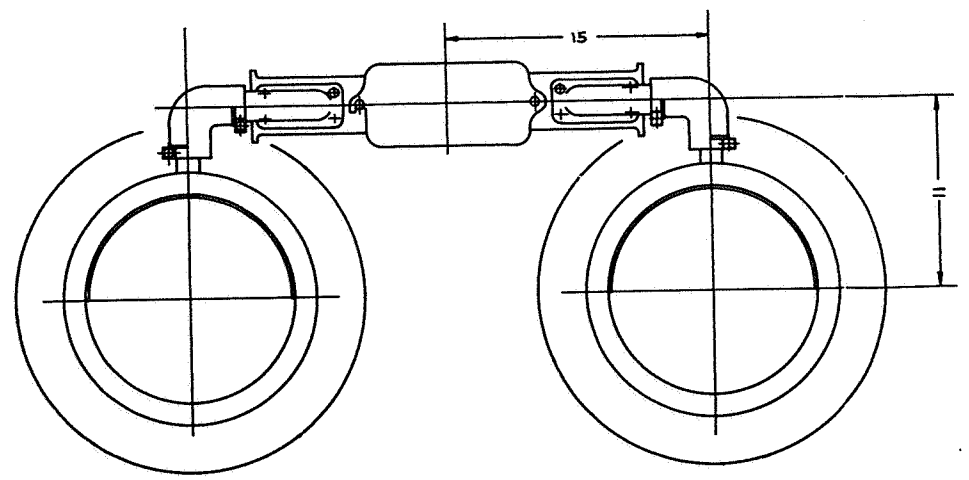

HC-120A HIGHWAY CROSSING SIGNAL
2 UNIT SIGNAL WITH NO EXT.

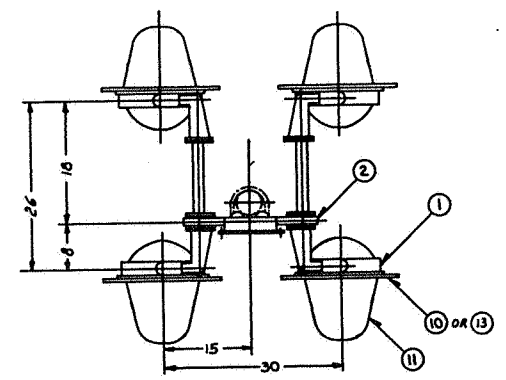

VIEW "C"
4 UNIT SIGNAL WITH NO FRONT EXT. & 10" BACK EXT.
(SCALE: 1 IN. = 1 FT.)

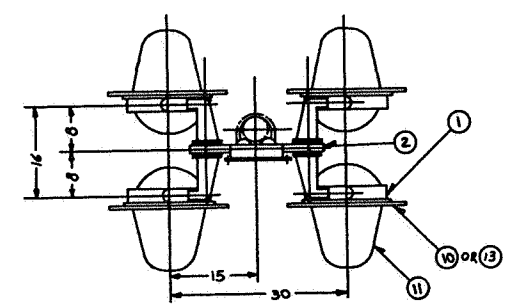

VIEW "B"
4 UNIT SIGNAL WITH NO EXT.
(SCALE: 1 IN. = 1 FT.)

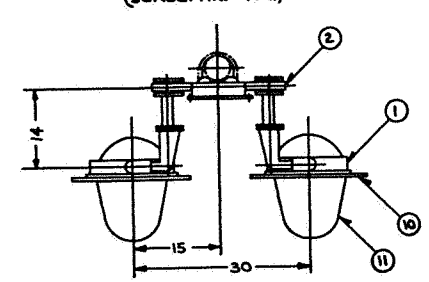

VIEW "A"
2 UNIT SIGNAL WITH 6" FRONT EXT.
(SCALE: 1 IN. = 1 FT.)

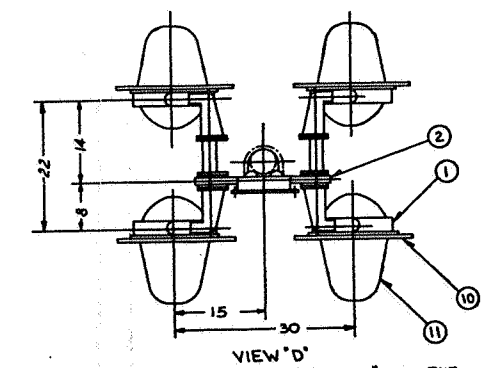

VIEW "D"
4 UNIT SIGNAL WITH NO FRONT EXT. & 6" BACK EXT.
(SCALE: 1 IN. = 1 FT.)

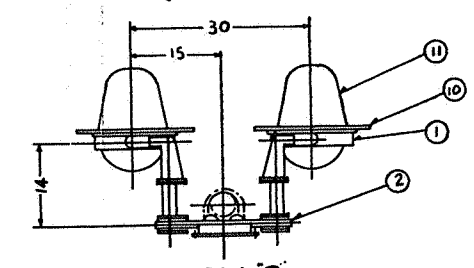

VIEW "G"
2 UNIT SIGNAL WITH 6" BACK EXT.
(SCALE: 1 IN = 1 FT)

1. ASSEMBLE SIGNAL UNITS & JUNCTION BOX / CROSS ARM PER INSTRUCTIONS ON DWG C 451523-0101. CONNECT WIRES TO TERMINALS IN JUNCTION BOX PER WIRING DIAGRAM USING HARDWARE SUPPLIED. ASSEMBLY OF HOODS & BACKGROUNDS TO SIGNALS NOT REQUIRED, BUT MUST BE SHIPPED IN SAME CONTAINER.

2. COAT THREADS OF LIGHT ASSEMBLY WITH DRY FILM LUBRICANT J041703 PRIOR TO ASSEMBLY TO JUNCTION BOX ELBOW. AFTER FILM DRIES APPLY LIGHT COAT OF GREASE (A041353) TO THREADS OF ELBOWS, BRACKETS, AND SIGNAL ASSEMBLIES. THIS SHOULD BE DONE IMMEDIATELY BEFORE ASSEMBLY TO REDUCE AMOUNT OF CONTAMINATION OF GREASE.

3. AFTER ASSEMBLY, FINGER TIGHTEN ONLY ALIGNMENT LOCKING SCREWS (J500099-0132) IN ADJUSTING ELBOWS (J026108-2101).

PART NUMBER	DESCRIPTION	MATERIAL/SPECIFICATION
N451506 - XXXX	J BOX & 2 OR 4 HC-120A ASSY	1 2 3

Drawing F451506 Sh. 10, Rev. 7

Figure 5-10. XA-120 with 2 or 4 Light HC-120A Assembly

SUFFIX NO.	QTY. OF SIGNAL LT.	ITEMS PER GROUP	ASSY AS SHOWN	WIRE PER VIEW	HC-100 SIG. (1)	JCT BOX/XARM (2)	SH	REMARKS
					F80170-SH.1	F451415		
-1101	2	I	✓	"E"	N394817	N451415-0701	7	W/30" X 15" ROUNDEL
-1102	2	I	VIEW "A"	"E"	N394817	N451415-0801	8	W/30" X 15" ROUNDEL
-1103	4	II	VIEW "B"	"F"	N394817	N451415-0702	7	W/30" X 15" ROUNDEL
-1104	4	II	VIEW "C"	"F"	N437283	N451415-0709	7	W/20" x 10" ROUNDEL W/2" HOT SPOT
-1105	4	II	VIEW "C"	"F"	N394817	N451415-0709	7	W/30" X 15" ROUNDEL
-1106	2	I	VIEW "A"	"E"	N437283	N451415-0801	8	W/20" x 10" ROUNDEL W/2" HOT SPOT
-1107	2	I	✓	"E"	N390730	N451415-0701	7	W/20" X 32" ROUNDEL
-1108	2	I	✓	"E"	N437283	N451415-0701	7	W/20" X 10" ROUNDEL W/2" HOT SPOT
-1109	4	II	VIEW "B"	"F"	N390730	N451415-0702	7	W/20" X 32" ROUNDEL
-1110	4	II	VIEW "B"	"F"	N437283	N451415-0702	7	W/20" X 10" ROUNDEL W/2" HOT SPOT
-1111	4	II	VIEW "D"	"F"	N390730	N451415-0804	8	W/20" X 32" ROUNDEL
-1112	2	I	VIEW "G"	"E"	N390730	N451415-0805	8	W/20" X 32" ROUNDEL

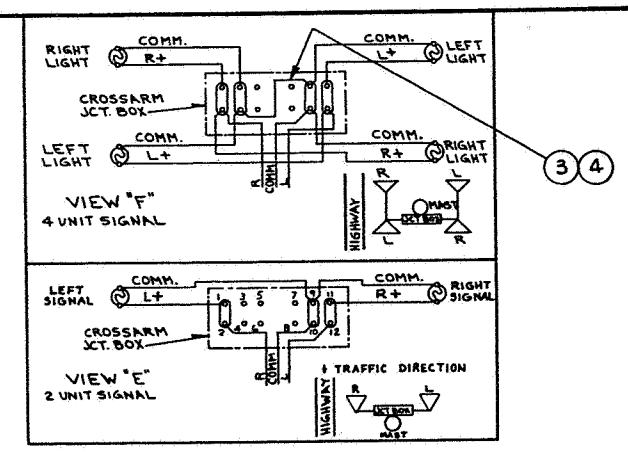

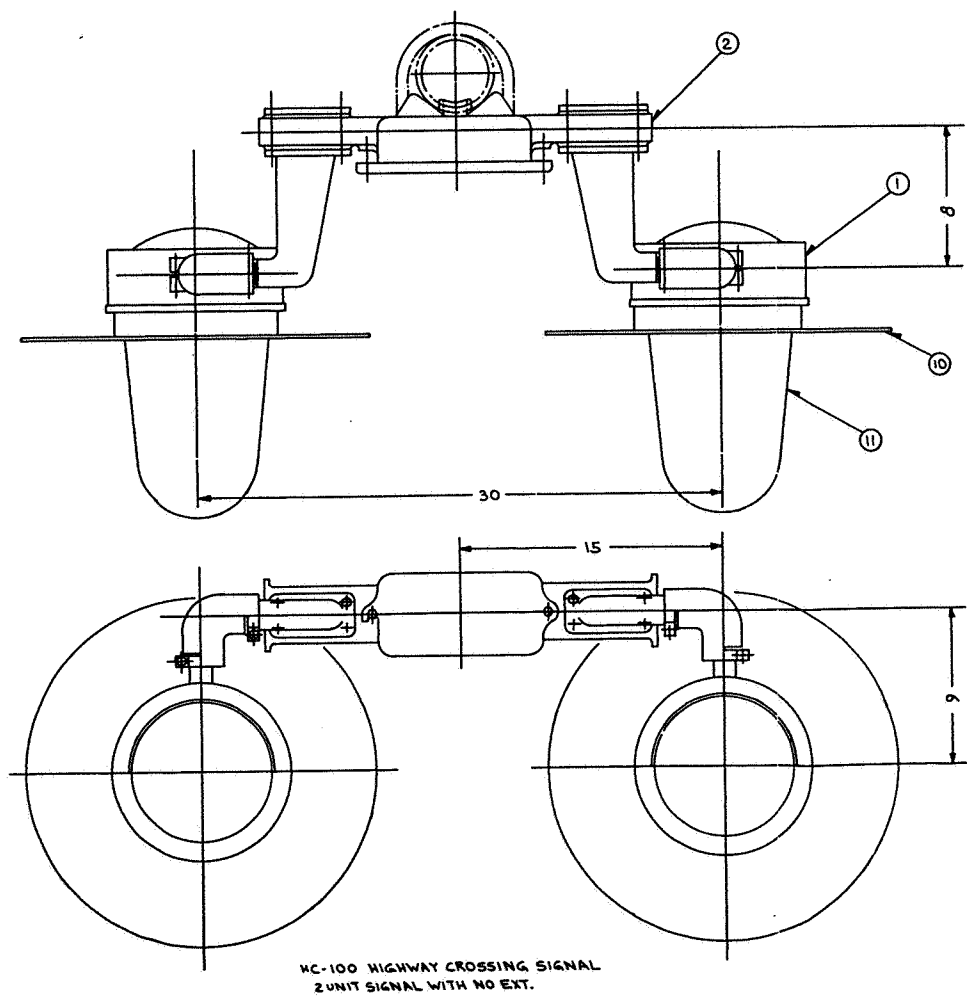

HC-100 HIGHWAY CROSSING SIGNAL
2 UNIT SIGNAL WITH NO EXT.

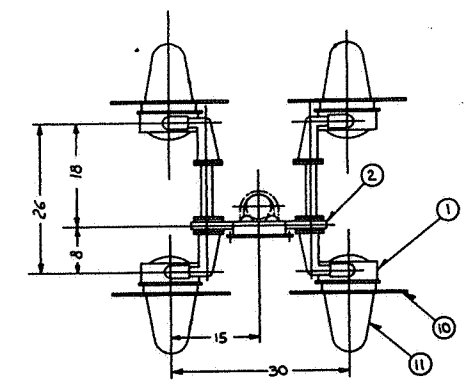

VIEW "C"
4 UNIT SIGNAL WITH NO FRONT EXT. & 10" BACK EXT.

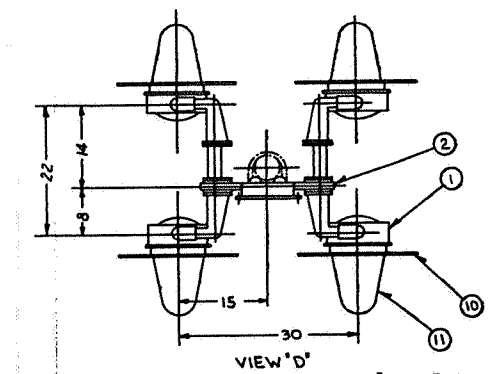

VIEW "D"
4 UNIT SIGNAL WITH NO FRONT EXT. & 6" BACK EXT.

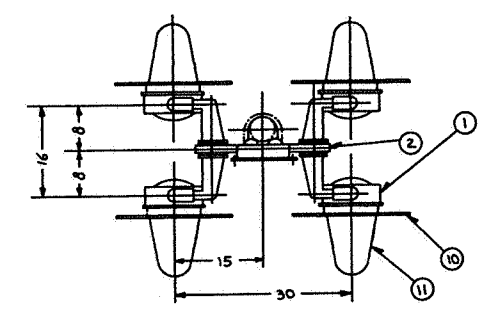

VIEW "B"
4 UNIT SIGNAL WITH NO EXT.

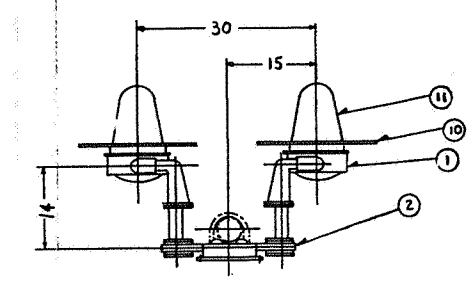

VIEW "G"
2 UNIT SIGNAL WITH 6" BACK EXT

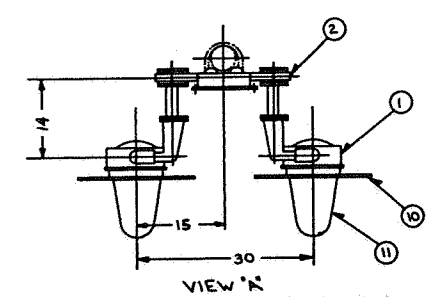

VIEW "A"
2 UNIT SIGNAL WITH 6" FRONT EXT.

(1) ASSEMBLE SIGNAL UNITS & JUNCTION BOX/CROSS ARM PER INSTRUCTIONS ON DWG C451523-0101. CONNECT WIRES TO TERMINALS IN JUNCTION BOX PER WIRING DIAGRAM USING HARDWARE SUPPLIED. ASSEMBLY OF HOODS & BACKGROUNDS TO SIGNALS NOT REQUIRED, BUT MUST BE SHIPPED IN SAME CONTAINER.

(2) COAT THREADS OF LIGHT ASSEMBLY WITH DRY FILM LUBRICANT J041703 PRIOR TO ASSEMBLY TO JUNCTION BOX ELBOW. AFTER FILM DRIES APPLY LIGHT COAT OF GREASE (A041353) TO THREADS OF ELBOWS BRACKETS AND SIGNAL ASSEMBLIES. THIS SHOULD BE DONE IMMEDIATELY BEFORE ASSEMBLY TO REDUCE AMOUNT OF CONTAMINATION OF GREASE.

(3) AFTER ASSEMBLY, FINGER TIGHTEN ONLY ALIGNMENT LOCKING SCREWS (J580099-0132) IN ADJUSTING ELBOWS (J026105-2101).

PART NUMBER	DESCRIPTION	MATERIAL/SPECIFICATION
N451506-XXXX	J BOX & 2 OR 4 HC-100 ASSY	1 2 3

Drawing F451506 Sh. 11, Rev. 5

Figure 5-11. XA-120 with 2 or 4 Light HC-100 Assembly

SERVICE MANUAL 6326
Appendix A

Parts List

FLASHING LIGHT ASSEMBLY

XA-120 Junction Box Crossarm

HC-100 Signal Light Unit

HC-120A Signal Light Unit

January, 1985
ID0099D-DN0433A

UNION SWITCH & SIGNAL DIVISION
AMERICAN STANDARD INC. / SWISSVALE, PA 15218

TED IN USA

A.1 GENERAL

This parts list covers detail parts for the following major components:

HC-100 Signal Light Units . . . . . p. A-1
HC-120 Signal Light Units . . . . . p. A-5
XA-120 Junction Box Crossarm . . . p. A-9

For parts associated with the various installations (applications), refer to Section V of the basic SM6326 manual.

HC-100 SIGNAL LIGHT UNIT PARTS LIST
(See Figure A-1)

HC-100 Complete	Case	Cover	Part #	ROUNDEL Deflection Horizontal/Vertical
N436679	M438144-001	M390663-001	J532135	20°/10°
N390730	M438144	M390663	J532119	20°/32°
N394817	M438144	M390663	J530119	30°/15°
N437283	M438144	M390663	J532135	20°/10°
N390729	M438144	M390663	J530117	70°/0°
N394830	M438144	M390663	J530120	30°/15°

HC-100 SIGNAL LIGHT UNIT PARTS LIST
(See Figure A-1)

ITEM	DESCRIPTION	PART NO.
1	Case	See Tabulation
2	Case	See Tabulation
3	Hinge Pin	M436367
4	Sponge Rubber SP D-1056	A750057
5	Screen, Vent	M390695
6	Screw	M436362
7	Cotter Pin, 3/32 x 5/8 SST KKT	J048687
8	Gasket	M391734
9	Screw, 1/2 x 13 x 1 Hex SST	J500083-0116
10	Washer, SST Lock No. 1/2	J475121-0115
13	Plastic Bag	J078399
14	Cotter Pin 1/16 x 3/4 SST KKT	J048688
15	Screw, 8-32 x 3/8 RDH SS	J525261
16	Nut, 8-32 NC-2B SQ STL	J048249
17	Washer, TNSN. 012 x 9/32 O.D.	J475104
28	Glass Reflector (Includes gasket)	N293215
29	Clip	M390684
30	Screw, 8-32 x 5/16 FILH SS	J522156
31	Nylon Washer	J475161
32	Transparent Window	M390679
33	Gasket	M390675
34	Spring	M390680
35	Screw, 10-32 x 12 RDH SS	J525262
36	Washer, SST Lock No. 10	J475121-0109
37	Moulded Rubber Gasket	J047444
38	Roundel	See Tabulation
40	Tag (For N390730 Only)	M438747-711
41	Screw, 1/4-20 x 3/4 Hex Hd.	J525311
42	Lamp Unit Support	J026105-2201
43	Silicone Rubber Compound	A041652
44	Rubber Gasket	J047081
48	Wire, Tag 12" Bundle	S705.11
52	Receptacle Holder	N451498-1301

HC-100 Signal Light Unit Accessories

DESCRIPTION	PART NO.
Background, 20" Diameter	M390713
Hood	M390714
Roundel Ground	R396874
Adapter	M451416-0104
Lamp, SCBC 10V/18W	J071463
Lamp, SCBC 10V/25W	J714574
Lamp, SCBC 110V/25W	J714054

X436678 SBM UNIT COMPL., USING HC-100 SIGNAL N436679, WITH HOOD 101, BACKGROUND 100 & LAMP 102.
X390731-001 SBM UNIT COMPL., USING HC-100 SIGNAL N394817, WITH HOOD 101 & BACKGROUND 100

PC. NO. HC-100 UNIT COMPL. 4	CASE 1		COVER 2		SUPPORT, LAMP UNIT 42		(REF.) FINISH OF ITEMS 1, 2 & 42	ROUNDEL 38						TAG 40	
								PC. NO.					(REF.) MATERIAL		
	F80171	SH.	F80171	SH.	V026105	SH.		C50028	SH.	COLOR	HORIZONTAL	DEFLECTION		10939	SH
N436679	M438144-001	01	M390663-001	02	J026105-2201	22	ALUM.	J532135	—	RED	20° SPREADLITE 2° HOT SPOT	10° DOWNWARD	LEXAN	—	—
N390730	M438144	01	M390663	02	J026105-2201	22	ALUM.	J532119	10	RED	20° SPREADLITE LONG RANGE	32° DOWNWARD	LEXAN	M438747	711
N394817	M438144	01	M390663	02	J026105-2201	22	ALUM.	J530119	8	RED	30° SPREADLITE LONG RANGE	15° DOWNWARD	LEXAN	—	—
N437283	M438144	01	M390663	02	J026105-2201	22	ALUM.	J532135	—	RED	20° SPREADLITE 2° HOT SPOT	10° DOWNWARD	LEXAN	—	—
N390729	M438144	01	M390663	02	J026105-2201	22	ALUM.	J530117	6	RED	70° SPREADLITE LONG RANGE	NONE	LEXAN	—	—
N394830	M438144	01	M390663	02	J026105-2201	22	ALUM.	J530120	7	YELLOW	30° SPREADLITE LONG RANGE	15° DOWNWARD	LEXAN	—	—

THE FOLLOWING ITEMS ARE "FOR REF. ONLY"				
100	M390713	D56217	6	BACKGROUND
101	M390714	D56217	7	HOOD
102	J714G3			LAMP, 10V, 18W
103	J71574			LAMP, 10V, 25W
104	J714054			LAMP, 110V, 25W
105				

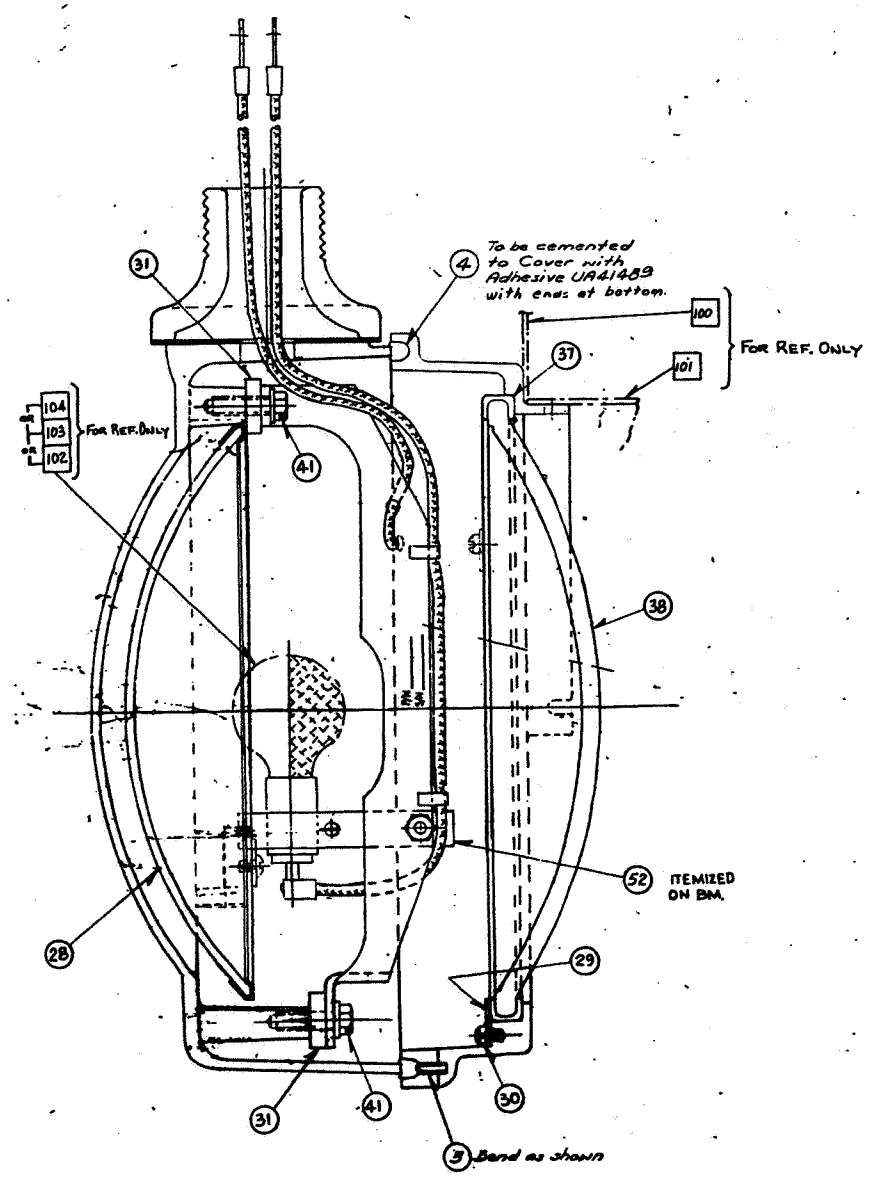

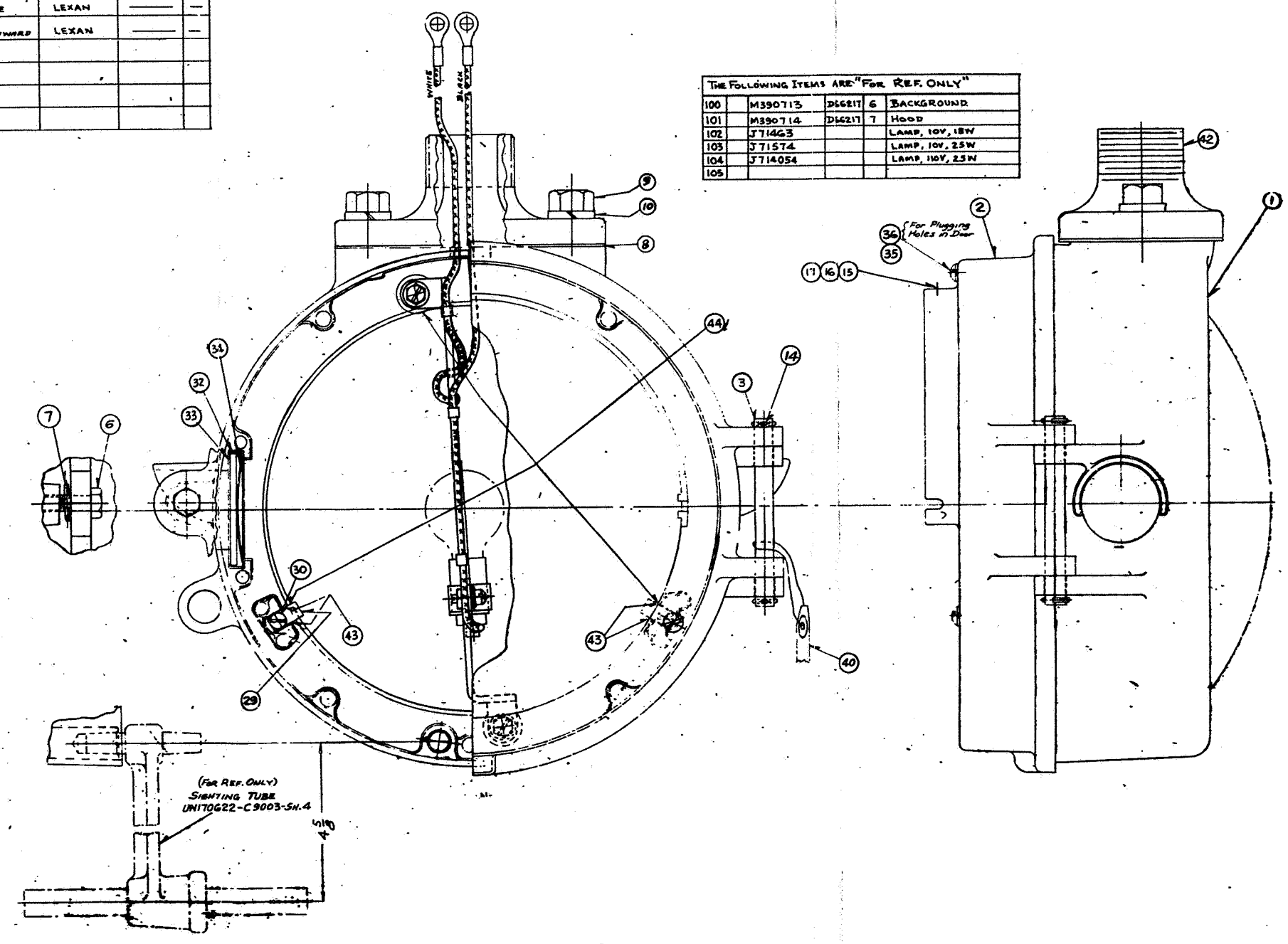

Drawing F80170 Sh. 1, Rev. 47

Figure A-1. HC-100 Signal Light Unit

HC-120A SIGNAL LIGHT UNIT PARTS LIST
(See Figure A-2)

HC-120A Complete	Roundel Part #	ROUNDEL Deflection Horizontal/Vertical
N451497-0301	J532136	20°/32°
N454497-0303	J532140	30°/15°
N451497-0305	J532141	70°/0°

ITEM	DESCRIPTION	PART NO.
1	Case, (Machined)	M451498-1702
2	Cover, (Machined)	M451498-1802
3	Sponge Rubber Shim 5/32 x 3/4	A750068
4	Gasket, 3/16 x 3/8 x 45"	J470070
5	Gasket, 1/16 x 1/4 x 45"	J470069
6	Roll Pin 1/4 x 1-1/8"	J487317
7	Roll Pin 1/4 x 1-3/4"	J487315
8	Screw, 5/16	M436362-001
9	Groove Pin 3/32 x 1/2	J703394
10	Brass Ventilator	J079416
11	Lamp Support Arm	M451498-1902
12	Socket Clamp	N451498-2103
13	Lamp Socket	N451498-1201
14	Side Window Gasket	N451498-2301
15	Side Window Retainder	M451498-2201
16	Side Molded Window	J776662-0201
17	Threaded Insert	M451498-2001
18	Reflector 12" PAR Metal	J532137-0201
19	Cable Tie	J703300
20	Thread Protector 1-5/8"	J703238
21	Washer, SST Plate No. 1/4	J475120-0112
22	Screw, Thumb 1/4-20 STL	J525325
23	Washer, Neoprene 1-1/2"	J475195
24	Plug, Reflector Centering	M451498-1601
26	Instruction Tag	M451523-0201
30	Clip	M437931
31	Red Roundel, 12" Diameter	See Tabulation
32	Red Roundel, 12" Diameter	See Tabulation
33	Red Roundel, 12" Diameter	See Tabulation
36	Screw, SST 10-32 x 1/2 Pan	J507296-0108
37	Washer, 10 Plate SST	J475120-0110
38	Nut, 10-32 Hex SST	J480211-0105
39	Washer, SST Lock No. 10	J475121-0109
40	Screw, 10-32 x 3/4 Pan Hd	J507296-0112
44	Silicon Rubber Compound	J041620
45	Tag (For N451497-0301 Only)	M438747

HC-120A Signal Light Unit Accessories

DESCRIPTION	PART NO.
Background, 20" Diameter	M451498-2401
Background, 24" Diameter	M451498-2402
Hood	M451498-2501
Lamp, SCBC 10V/18W	J071463
Lamp, SCBC 10V/25W	J714574
Lamp, SCBC 110V/25W	J714054
Lamp, Q.I. 10V/16W	J714283
Lamp, Q.I. 10V/36W	J714284

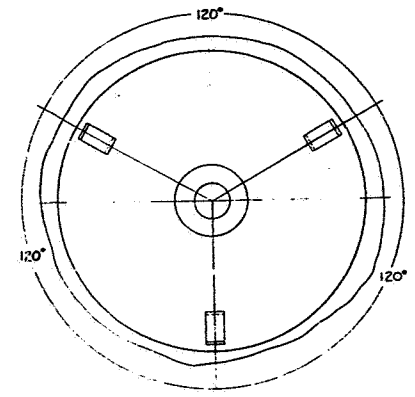

VIEW "X"
LOCATION OF ITEM 3 & 23

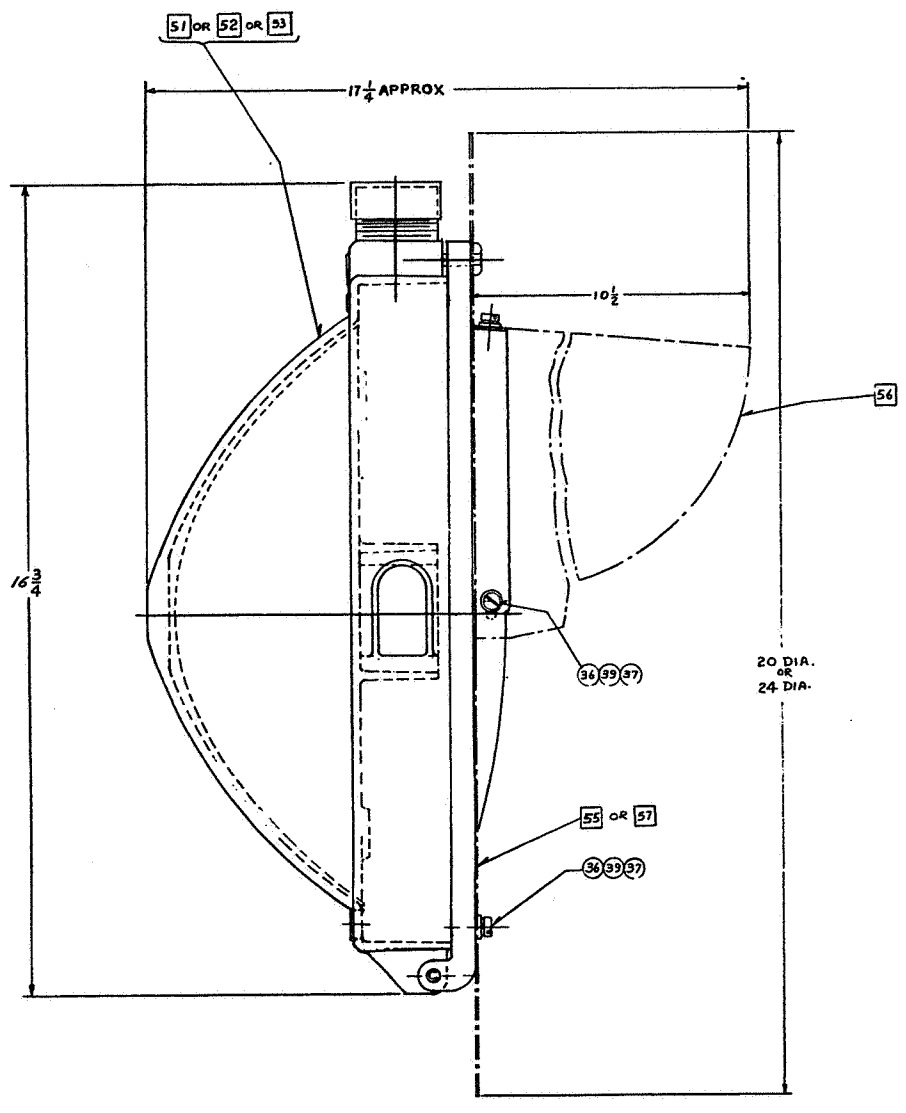

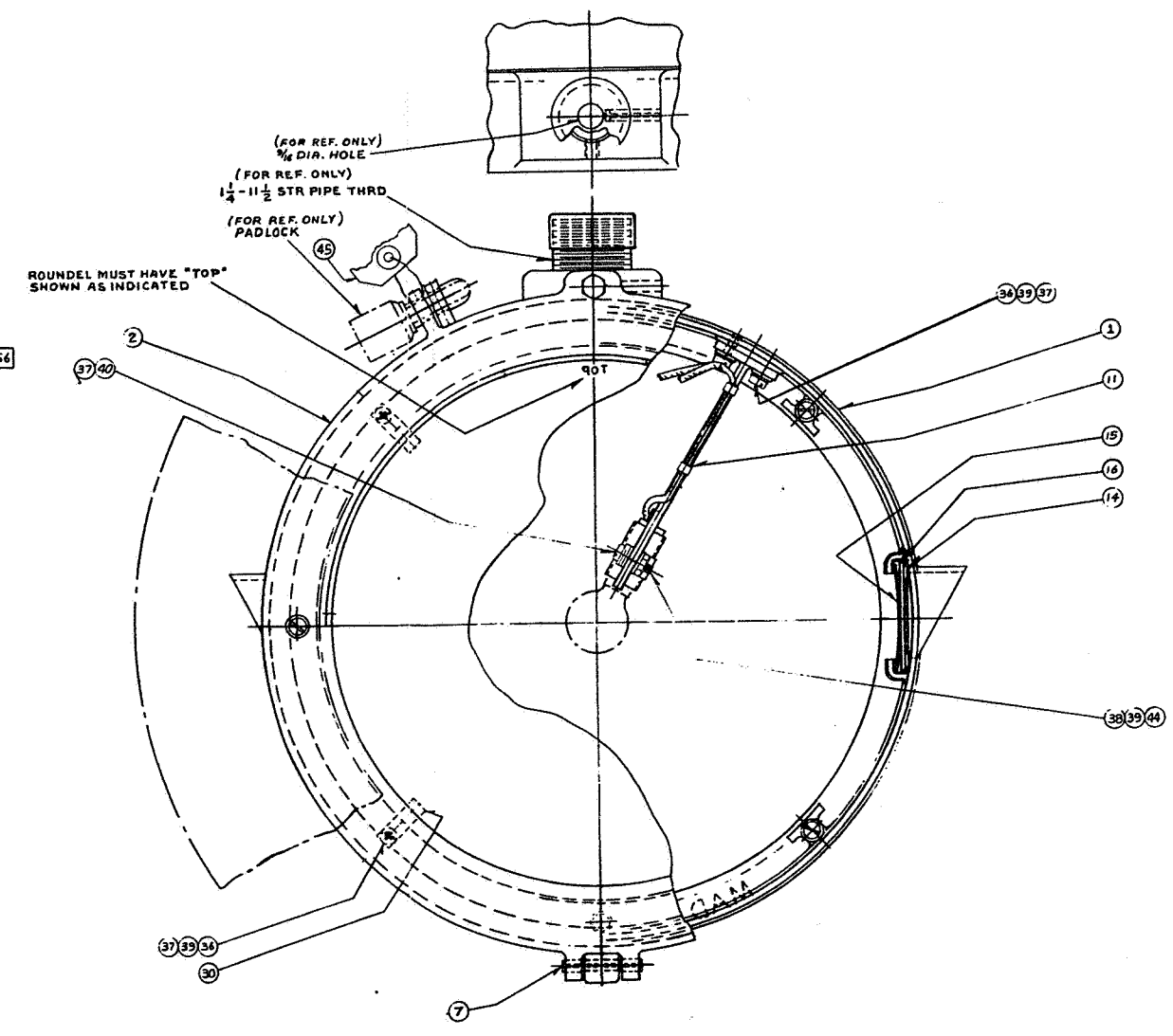

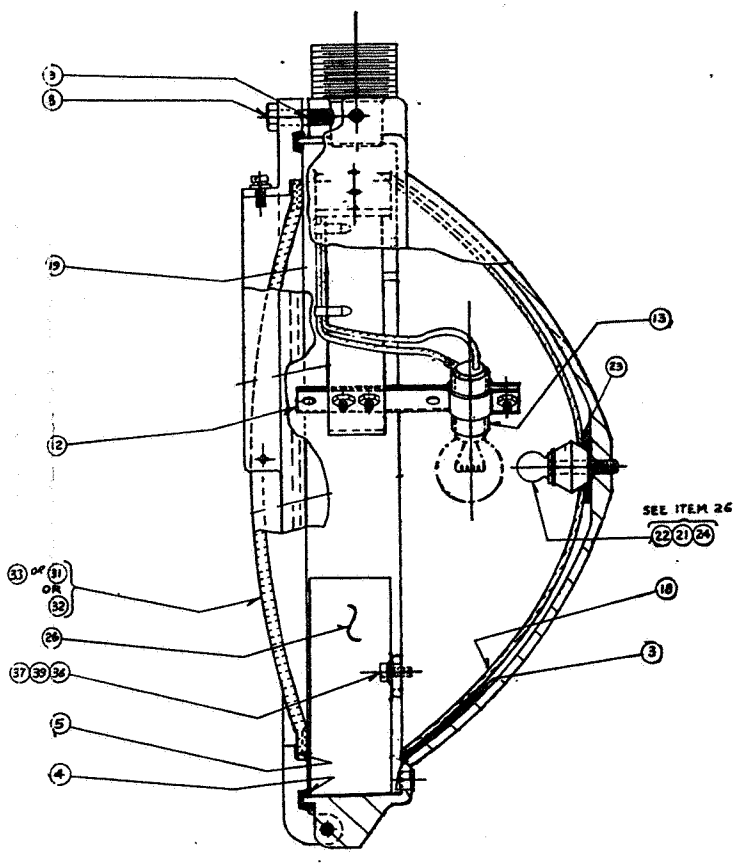

Drawing R451497 Sh. 3, Rev. 11

Figure A-2. HC-120A Signal Light Unit

XA-120 JUNCTION BOX CROSSARM PARTS LIST
(See Figure A-3)

PART NO.	DESCRIPTION
M451415-0701	With two signal light unit brackets
M451415-0702	With four signal light unit brackets
M451415-0709	With four signal light unit brackets

ITEM	DESCRIPTION	PART NO.
1	Junction Box and Crossarm	J026110
3	Aluminum Elbow	J026105-2101
4	Aluminum Bracket	J026105-2001
5	Terminal Block	N194765
6	Screw, 10-32 x 5/8 FIL HD	J525282-0110
8	Nut, 3/8-16 Hex	J480210-0103
9	Die Cast Alum. Cover	J026094
10	Screw, 3/8-16 x 2" Hex	J500099-0132
11	Washer, 3/8 SPR. STL.	J475138-0113
12	Plate (For -0701 Only)	M451416-0201
13	Cork Gasket	J047313
14	Screw, 3/8-16x3 HX HD	J500099-0156
15	End Cover Plate	J026105-2301
16	Screw, 3/8-16 x 1/2 Cap (For -0709 Only)	J500099-0124
17	Arm, 10 In. Extension (For -0709 Only)	J451416-0412
18	Bag of Tags	N438079
20	Sponge Rubber D-1056 SPG	A750043
25	Junction Box Crossarm	See Tabulation
26	U Bolt, 5/8 (4" Pipe)	M392791
27	U Bolt, 5/8 (5" Pipe)	M397808
28	10" Clamp Assembly Kit	X451498-2603
29	Nut, 5/8-11 Hex. Galv.	J480210-0156
30	Washer, 5/8 PL. Galv.	J475132-0118
31	Extension Arm 10"	R451416-0412
32	Screw, 3/8-16 x 1-1/2 Hex Galv.	J500099-0124
33	Washer, 3/8 Stl. Lk. Galv.	J475138-0113
34	Nut, 3/8 Hex. Stl. Galv.	J480210-0103
35	Cork Gasket	J047313
36	Extension Arm 6"	R451416-0406
37	Clamp Assembly Kit, 10"	J033183
38	Extension Arm 10"	R451416-0410

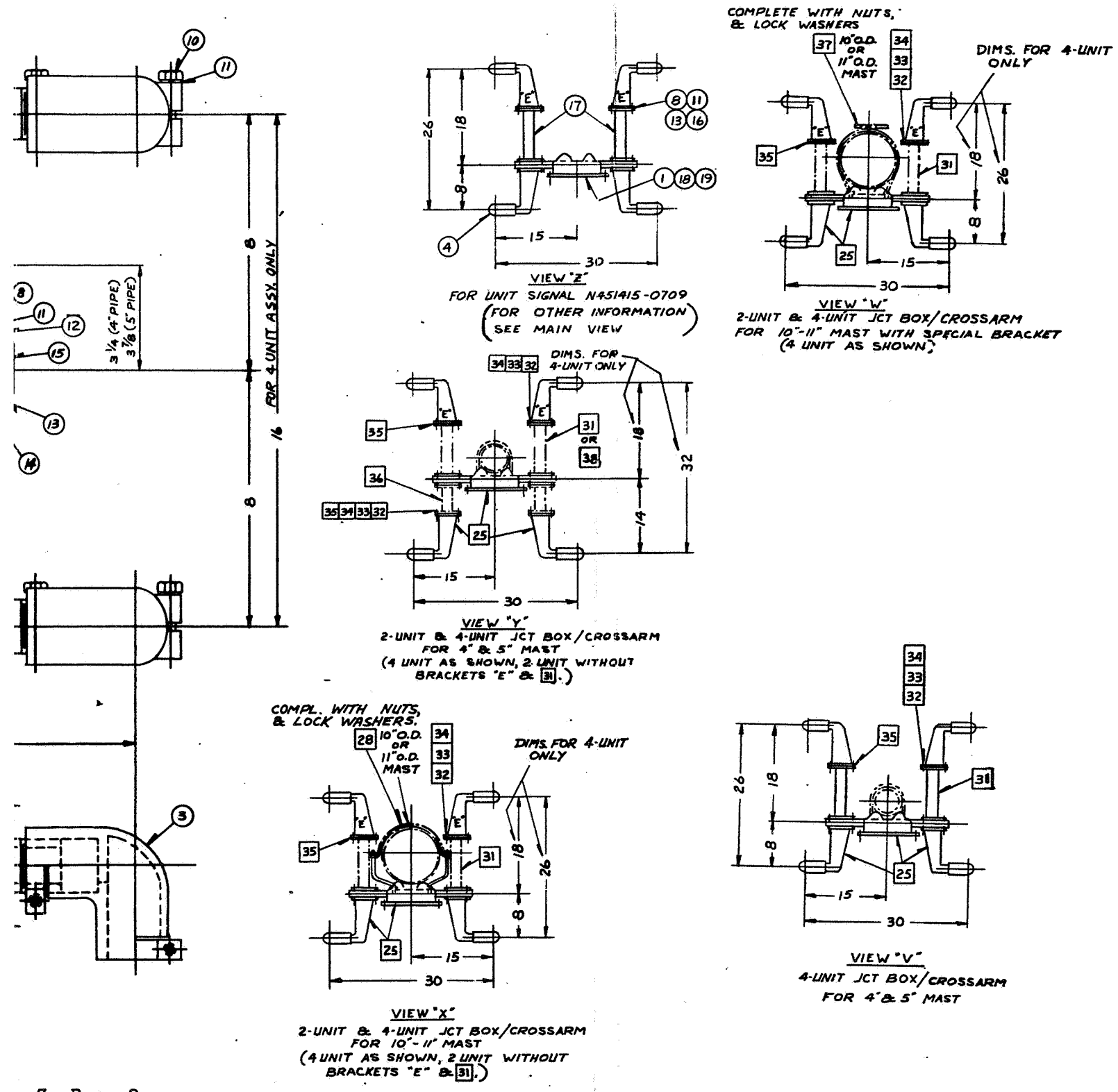

. 7, Rev. 2

Figure A-3. HC-120A Junction Box Crossarms

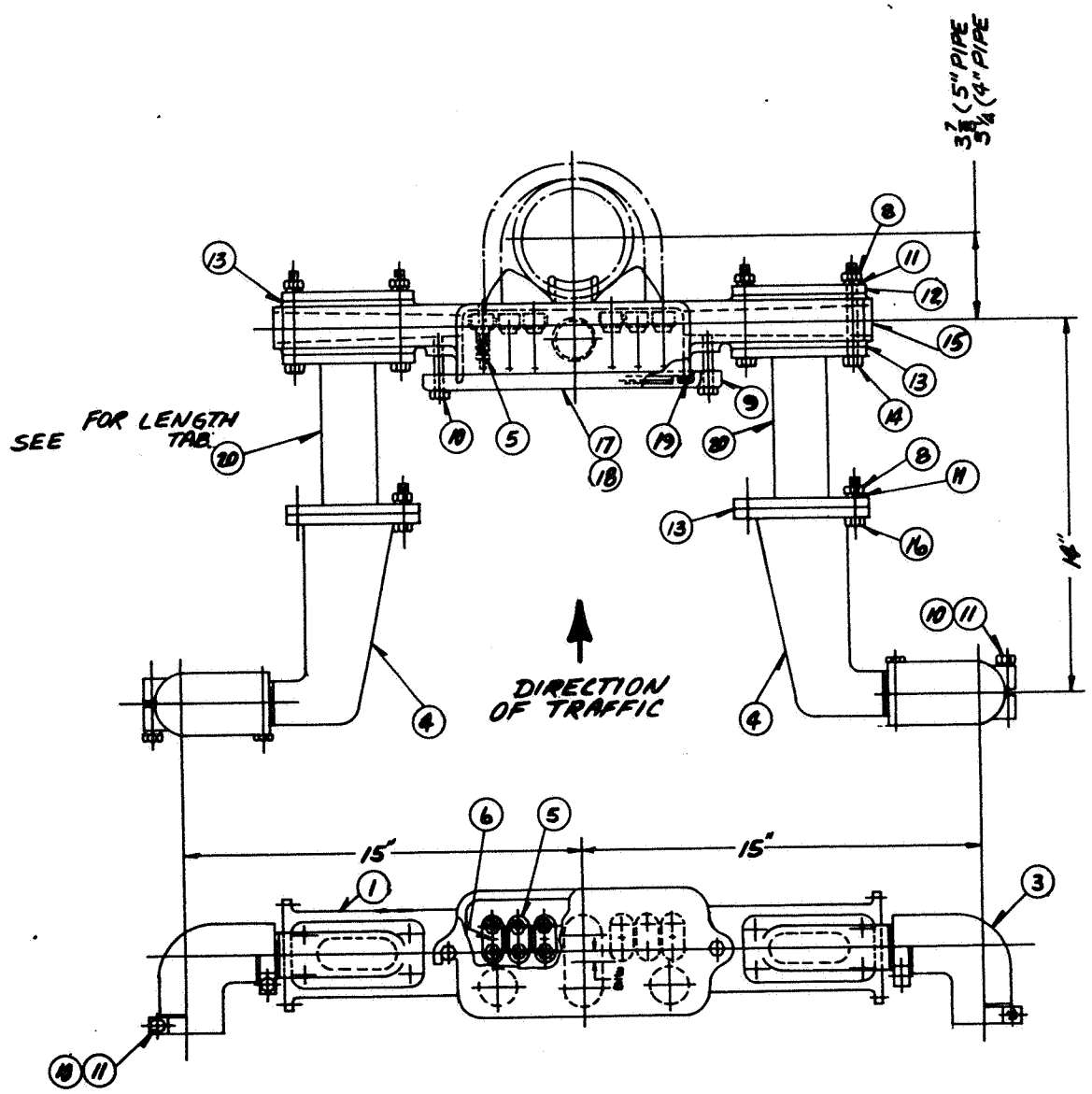

COMBINED JUNCTION & CROSSARM
FOR 2 OR 4 LIGHT SIGNALS

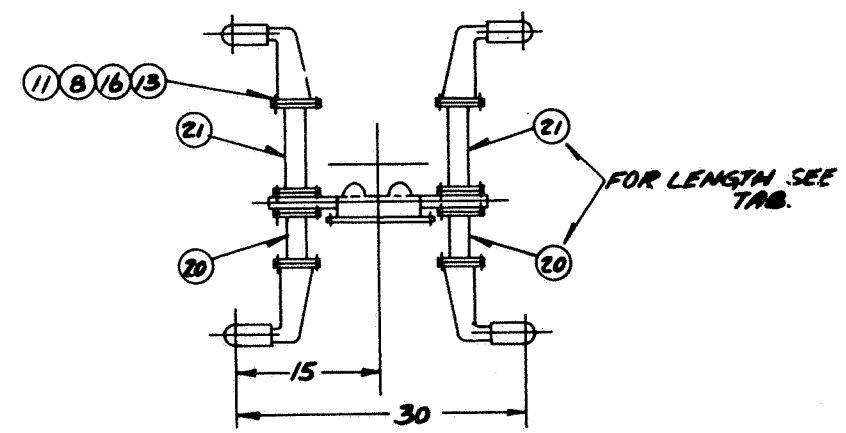

VIEW "A"
4-WAY JCT. BOX & CROSSARM
(FOR ALL OTHER INFO. SEE MAIN VIEW)

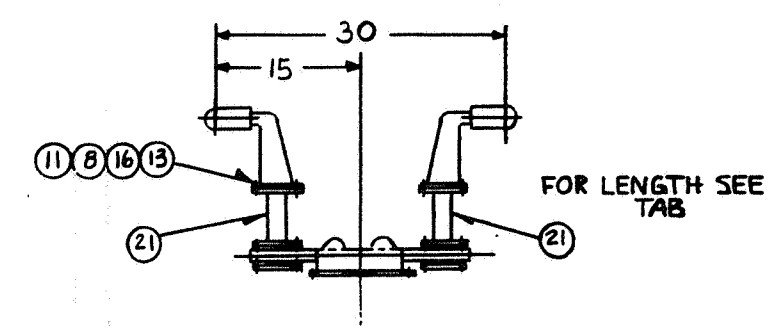

VIEW "C"
2-WAY JCT. BOX & CROSSARM
(FOR ALL OTHER INFO. SEE MAIN VIEW)

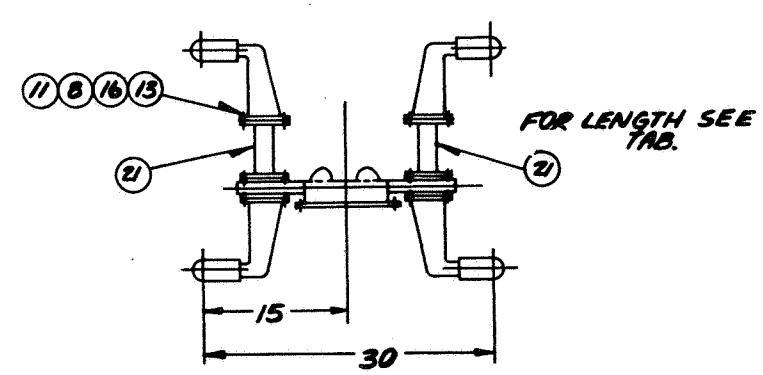

VIEW "B"
4-WAY JCT. BOX & CROSSARM
(FOR ALL OTHER INFO. SEE MAIN VIEW.)

Drawing F451415 Sh. 8, Rev. 1

Figure A-4. XA-120 Junction Box Crossarm With Extensions

XA-120A JUNCTION BOX CROSSARM WITH EXTENSIONS
(See Figure A-4)

XA-120A Junction Box Crossarm with Extensions Complete*

Part No.	Signal Light Bracket Quantity	View	Front Extension Arm Part No./Length	Rear Extension Arm Part No./Length
N451415-0801	2	Main	R451416-0406/6"	--------/------
N451415-0802	4	A	R451416-0406/6"	R451416-0412/10"
N451415-0803	4	A	R451416-0406/6"	R451416-0410/16"
N451415-0804	4	B	--	R451416-0406/6"
N451415-0805	2	C	--	R451416-0406/6"

*For additional junction box crossarms with extension see Figure A-3 and associated parts list.

ITEM	DESCRIPTION	PART NO.
1	Box, Junction and Crossarms	J026110
3	Adjusting Elbow	J026105-2101
4	Signal Light Bracket	J026105-2001
5	3-Way Terminal Block	N194765
6	Screw, #10-32 x 5/8 Fil. Galv.	J525282-0110
8	Nut, 3/8 Hex. Stl. Galv.	J480210-0103
9	Cover	J026094
10	Screw, 3/8-16 x 2" Hex. Galv.	J500099-0132
11	Washer, 3/8 Lk. Stl. Galv.	J475138-0113
12	Cover Plate	M451416-0201
13	Gasket	J047313
14	Screw, 3/8-16 x 3-1/2 Hex. Galv.	J500099-0156
15	End Cover Plate	J026105-2301
16	Screw, 3/8-16 x 1-1/2 Hex. Galv.	J500099-0124
17	Bag of Tags, 1 thru 12	N438079
19	Gasket, 1/4 x 1/2 x 26 Rubber	A750043
20	Extension Arm (Front)	See Tabulation
21	Extension Arm (Back)	See Tabulation